Data sheet

# SC-SMT 3.81/10/135G 3.2SN BK BX

**Weidmüller Interface GmbH & Co. KG**
Klingenbergstraße 26
D-32758 Detmold
Germany

www.weidmueller.com

## Product image

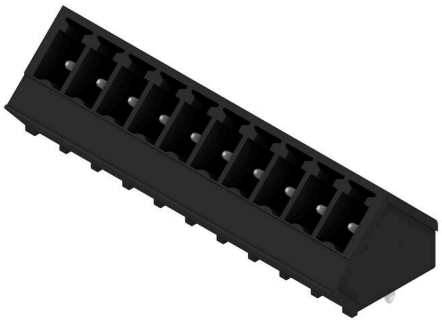

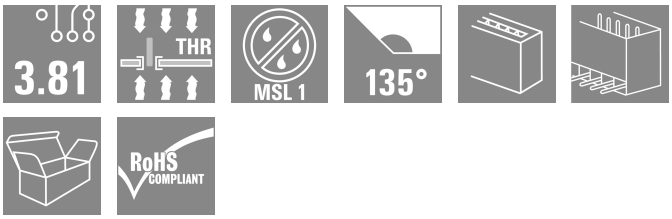


The high-temperature-resistant SC-SMT pin header with 135° wire outlet direction: the 135° angle exists between the plugging direction and the solder pin. The wire outlet direction is then diagonal or 45° to the PCB.

- More freedom when designing components and devices.
- Easy access and a high component density when multiple interfaces are arranged in parallel within a single plugging area
- The housing design is application-friendly because of the additional optional wire outlet direction.
- Available as closed (G) and with solder flange (LF).
- Pin length of either 1.5 mm or 3.2 mm

Weidmüller's 3.81-mm-pitch (0.15 inch) plug-in connectors are compatible with the layouts of standard connectors and offer space for labelling and coding.

### General ordering data

| | |
|---|---|
| Version | PCB plug-in connector, male header, closed side, THT/THR solder connection, 3.81 mm, Number of poles: 10, 135°, Solder pin length (l): 3.2 mm, tinned, black, Box |
| Order No. | 1977710000 |
| Type | SC-SMT 3.81/10/135G 3.2SN BK BX |
| GTIN (EAN) | 4032248685295 |
| Qty. | 50 items |
| Product data | IEC: 320 V / 17.5 A<br>UL: 300 V / 11 A |
| Packaging | Box |

# SC-SMT 3.81/10/135G 3.2SN BK BX

**Weidmüller Interface GmbH & Co. KG**
Klingenbergstraße 26
D-32758 Detmold
Germany

www.weidmueller.com

## Technical data

### Approvals

| | |
|---|---|
| Approvals | |
| ROHS | Conform |
| UL File Number Search | UL Website |
| Certificate No. (cURus) | E60693 |

### Dimensions and weights

| | | | |
|---|---|---|---|
| Depth | 13.1 mm | Depth (inches) | 0.5157 inch |
| Height | 14.2 mm | Height (inches) | 0.5591 inch |
| Height of lowest version | 11 mm | Width | 39.49 mm |
| Width (inches) | 1.5547 inch | Net weight | 3.56 g |

### Environmental Product Compliance

| | |
|---|---|
| RoHS Compliance Status | Compliant without exemption |
| REACH SVHC | No SVHC above 0.1 wt% |

### System specifications

| | | | |
|---|---|---|---|
| Product family | OMNIMATE Signal - series BC/SC 3.81 | Type of connection | Board connection |
| Mounting onto the PCB | THT/THR solder connection | Pitch in mm (P) | 3.81 mm |
| Pitch in inches (P) | 0.150 " | Outgoing elbow | 135° |
| Number of poles | 10 | Number of solder pins per pole | 1 |
| Solder pin length (l) | 3.2 mm | Solder pin length tolerance | 0 / -0,02 mm |
| Solder pin dimensions | d = 1.0 mm, Octagonal | Solder pin dimensions = d tolerance | 0 / -0,03 mm |
| Solder eyelet hole diameter (D) | 1.3 mm | Solder eyelet hole diameter tolerance (D) | + 0,1 mm |
| Outside diameter of solder pad | 2.1 mm | Template aperture diameter | 1.9 mm |
| L1 in mm | 34.29 mm | L1 in inches | 1.350 " |
| Number of rows | 1 | Pin series quantity | 1 |
| Touch-safe protection acc. to DIN VDE 57 106 | finger-safe unplugged/ back-of-hand-safe plugged | Touch-safe protection acc. to DIN VDE 0470 | IP20 plugged/ IP10 unplugged |
| Volume resistance | ≤5 mΩ | Can be coded | Yes |

### Material data

| | | | |
|---|---|---|---|
| Insulating material | LCP GF | Colour | black |
| Colour chart (similar) | RAL 9011 | Insulating material group | IIIa |
| Comparative Tracking Index (CTI) | ≥ 175 | Moisture Level (MSL) | 1 |
| UL 94 flammability rating | V-0 | Contact material | Cu-alloy |
| Contact surface | tinned | Storage temperature, min. | -40 °C |
| Storage temperature, max. | 70 °C | Operating temperature, min. | -50 °C |
| Operating temperature, max. | 120 °C | Temperature range, installation, min. | -25 °C |
| Temperature range, installation, max. | 120 °C | | |

### Rated data acc. to IEC

| | | | |
|---|---|---|---|
| tested acc. to standard | IEC 60664-1, IEC 61984 | Rated current, min. number of poles (Tu=20°C) | 17.5 A |
| Rated current, max. number of poles (Tu=20°C) | 17.1 A | Rated current, min. number of poles (Tu=40°C) | 17.5 A |

# SC-SMT 3.81/10/135G 3.2SN BK BX

**Weidmüller Interface GmbH & Co. KG**
Klingenbergstraße 26
D-32758 Detmold
Germany

www.weidmueller.com

## Technical data

| | | | |
|---|---|---|---|
| Rated current, max. number of poles (Tu=40°C) | 17.5 A | Rated voltage for surge voltage class / pollution degree II/2 | 320 V |
| Rated voltage for surge voltage class / pollution degree III/2 | 160 V | Rated voltage for surge voltage class / pollution degree III/3 | 160 V |
| Rated impulse voltage for surge voltage class/ pollution degree II/2 | 2.5 kV | Rated impulse voltage for surge voltage class/ pollution degree III/2 | 2.5 kV |
| Rated impulse voltage for surge voltage class/ contamination degree III/3 | 2.5 kV | Short-time withstand current resistance | 3 x 1s with 76 A |

### Rated data acc. to CSA

| | | | |
|---|---|---|---|
| Institute (CSA) | CSA | Certificate No. (CSA) | 200039-1121690 |
| Rated voltage (Use group B / CSA) | 300 V | Rated current (Use group B / CSA) | 11 A |
| Reference to approval values | Specifications are maximum values, details - see approval certificate. | | |

### Rated data acc. to UL 1059

| | | | |
|---|---|---|---|
| Institute (cURus) | CURUS | Certificate No. (cURus) | E60693 |
| Rated voltage (Use group B / UL 1059) | 300 V | Rated voltage (Use group D / UL 1059) | 300 V |
| Rated current (Use group B / UL 1059) | 11 A | Rated current (Use group D / UL 1059) | 11 A |
| Reference to approval values | Specifications are maximum values, details - see approval certificate. | | |

### Packing

| | | | |
|---|---|---|---|
| Packaging | Box | VPE length | 40.00 mm |
| VPE width | 65.00 mm | VPE height | 155.00 mm |

### Important note

| | |
|---|---|
| IPC conformity | Conformity: The products are developed, manufactured and delivered according international recognized standards and norms and comply with the assured properties in the data sheet resp. fulfill decorative properties in accordance with IPC-A-610 "Class 2". Further claims on the products can be evaluated on request. |
| Notes | • Additional variants on request<br>• Rated current related to rated cross-section & min. No. of poles.<br>• Rated data refer only to the component itself. Clearance and creepage distances to other components are to be designed in accordance with the relevant application standards.<br>• P on drawing = pitch<br>• In accordance with IEC 61984, OMNIMATE-connectors are connectors without breaking capacity (COC). During designated use, connectors are not allowed to be engaged or disengaged when live or under load<br>• Long term storage of the product with average temperature of 50 °C and maximum humidity 70%, 36 months |

### Classifications

| | | | |
|---|---|---|---|
| ETIM 8.0 | EC002637 | ETIM 9.0 | EC002637 |
| ETIM 10.0 | EC002637 | ECLASS 14.0 | 27-46-02-01 |
| ECLASS 15.0 | 27-46-02-01 | | |

# SC-SMT 3.81/10/135G 3.2SN BK BX

**Weidmüller Interface GmbH & Co. KG**
Klingenbergstraße 26
D-32758 Detmold
Germany

www.weidmueller.com

## Drawings

### Product image

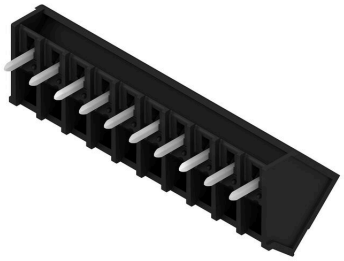

### Dimensional drawing

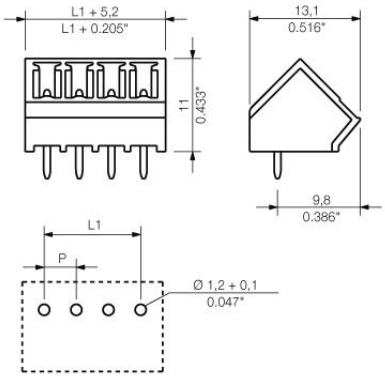

# SC-SMT 3.81/10/135G 3.2SN BK BX

**Weidmüller Interface GmbH & Co. KG**
Klingenbergstraße 26
D-32758 Detmold
Germany

www.weidmueller.com

## Accessories

### Coding elements

Only connects what is supposed to be connected: the right connection at the right place.
Coding elements and locking devices clearly assign connecting elements during the manufacturing process and operation
The coding elements and locking devices are inserted prior to assembly or during the cable assembly phase.
The Weidmüller alternative: configure online using the variant configurator to precode prior to delivery.
Incorrect assembly on the circuit board and incorrect plugging of connecting elements is no longer possible.
The advantage: no troubleshooting during manufacture and no operational errors by the user.

### General ordering data

| | | |
|---|---|---|
| Type | SC-SMT 3.81 KO GY BX | Version |
| Order No. | 1968900000 | PCB plug-in connector, Accessories, Coding element, grey, Number of |
| GTIN (EAN) | 4032248772865 | poles: 6 |
| Qty. | 100 ST | |