Data sheet

SC 3.81/02/135G 3.2SN OR BX

Weidmüller Interface GmbH & Co. KG
Klingenbergstraße 26
D-32758 Detmold
Germany

www.weidmueller.com

Product image

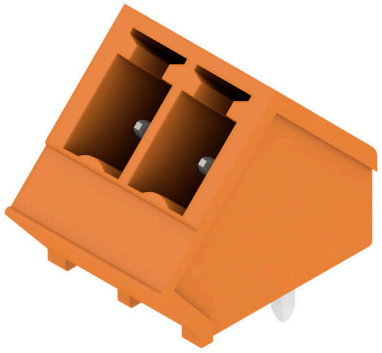

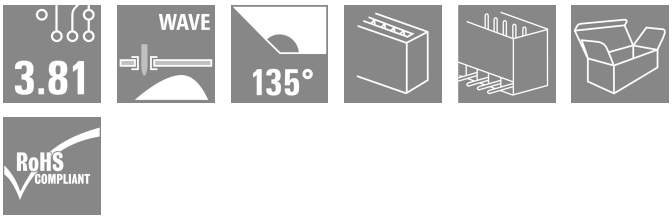

Similar to illustration

The SC pin header with 135° wire outlet direction: the 135° angle exists between the plugging direction and the solder pin. The wire outlet direction is then diagonal or 45° to the PCB.

- More freedom when designing components and devices.
- Easy access and a high component density when multiple interfaces are arranged in parallel within a single plugging area
- The housing design is application-friendly because of the additional optional wire outlet direction.
- Available in closed (G) and screw flange (F) versions.

Weidmüller's 3.81-mm-pitch (0.15 inch) plug-in connectors are compatible with the layouts of standard connectors and offer space for labelling and coding.

General ordering data

Version	PCB plug-in connector, male header, closed side, THT solder connection, 3.81 mm, Number of poles: 2, 135°, Solder pin length (l): 3.2 mm, tinned, orange, Box
Order No.	1975720000
Type	SC 3.81/02/135G 3.2SN OR BX
GTIN (EAN)	4032248684144
Qty.	50 items
Product data	IEC: 320 V / 17.5 A UL: 300 V / 11 A
Packaging	Box

SC 3.81/02/135G 3.2SN OR BX

Weidmüller Interface GmbH & Co. KG
Klingenbergstraße 26
D-32758 Detmold
Germany

www.weidmueller.com

Technical data

Approvals

Approvals	
ROHS	Conform
UL File Number Search	UL Website
Certificate No. (cURus)	E60693

Dimensions and weights

Depth	13.1 mm	Depth (inches)	0.5157 inch
Height	14.2 mm	Height (inches)	0.5591 inch
Height of lowest version	11 mm	Width	9.01 mm
Width (inches)	0.3547 inch	Net weight	0.88 g

Environmental Product Compliance

RoHS Compliance Status	Compliant without exemption
REACH SVHC	No SVHC above 0.1 wt%

System specifications

Product family	OMNIMATE Signal - series BC/SC 3.81	Type of connection	Board connection
Mounting onto the PCB	THT solder connection	Pitch in mm (P)	3.81 mm
Pitch in inches (P)	0.150 "	Outgoing elbow	135°
Number of poles	2	Number of solder pins per pole	1
Solder pin length (l)	3.2 mm	Solder pin length tolerance	0 / -0.2 mm
Solder pin dimensions	d = 1.0 mm, Octagonal	Solder pin dimensions = d tolerance	0 / -0,03 mm
Solder eyelet hole diameter (D)	1.2 mm	Solder eyelet hole diameter tolerance (D)	+ 0,1 mm
L1 in mm	3.81 mm	L1 in inches	0.150 "
Number of rows	1	Pin series quantity	1
Touch-safe protection acc. to DIN VDE 57 106	finger-safe unplugged/ back-of-hand-safe plugged	Touch-safe protection acc. to DIN VDE 0470	IP20 plugged/ IP10 unplugged
Volume resistance	≤5 mΩ	Can be coded	Yes
Plugging force/pole, max.	7 N	Pulling force/pole, max.	5 N

Material data

Insulating material	PA GF	Colour	orange
Colour chart (similar)	RAL 2000	Insulating material group	II
Comparative Tracking Index (CTI)	≥ 550	Moisture Level (MSL)	
UL 94 flammability rating	V-0	Contact material	Copper alloy
Contact surface	tinned	Storage temperature, min.	-40 °C
Storage temperature, max.	70 °C	Operating temperature, min.	-50 °C
Operating temperature, max.	120 °C	Temperature range, installation, min.	-25 °C
Temperature range, installation, max.	120 °C		

Rated data acc. to IEC

tested acc. to standard	IEC 60664-1, IEC 61984	Rated current, min. number of poles (Tu=20°C)	17.5 A
Rated current, max. number of poles (Tu=20°C)	17.5 A	Rated current, min. number of poles (Tu=40°C)	17.5 A

SC 3.81/02/135G 3.2SN OR BX

Weidmüller Interface GmbH & Co. KG
Klingenbergstraße 26
D-32758 Detmold
Germany

www.weidmueller.com

Technical data

Rated current, max. number of poles (Tu=40°C)	17.1 A	Rated voltage for surge voltage class / pollution degree II/2	320 V
Rated voltage for surge voltage class / pollution degree III/2	160 V	Rated voltage for surge voltage class / pollution degree III/3	160 V
Rated impulse voltage for surge voltage class/ pollution degree II/2	2.5 kV	Rated impulse voltage for surge voltage class/ pollution degree III/2	2.5 kV
Rated impulse voltage for surge voltage class/ contamination degree III/3	2.5 kV	Short-time withstand current resistance	3 x 1s with 76 A

Rated data acc. to CSA

Institute (CSA)	CSA	Certificate No. (CSA)	200039-1121690
Rated voltage (Use group B / CSA)	300 V	Rated current (Use group B / CSA)	11 A
Rated current (Use group D / CSA)	10 A	Reference to approval values	Specifications are maximum values, details - see approval certificate.

Rated data acc. to UL 1059

Institute (cURus)	CURUS	Certificate No. (cURus)	E60693
Rated voltage (Use group B / UL 1059)	300 V	Rated voltage (Use group D / UL 1059)	300 V
Rated current (Use group B / UL 1059)	11 A	Rated current (Use group D / UL 1059)	10 A
Reference to approval values	Specifications are maximum values, details - see approval certificate.		

Packing

Packaging	Box	VPE length	77.00 mm
VPE width	68.00 mm	VPE height	41.00 mm

Important note

IPC conformity	Conformity: The products are developed, manufactured and delivered according international recognized standards and norms and comply with the assured properties in the data sheet resp. fulfill decorative properties in accordance with IPC-A-610 "Class 2". Further claims on the products can be evaluated on request.
Notes	• Additional variants on request • Rated current related to rated cross-section & min. No. of poles. • Rated data refer only to the component itself. Clearance and creepage distances to other components are to be designed in accordance with the relevant application standards. • P on drawing = pitch • In accordance with IEC 61984, OMNIMATE-connectors are connectors without breaking capacity (COC). During designated use, connectors are not allowed to be engaged or disengaged when live or under load • Long term storage of the product with average temperature of 50 °C and maximum humidity 70%, 36 months

Classifications

ETIM 8.0	EC002637	ETIM 9.0	EC002637
ETIM 10.0	EC002637	ECLASS 14.0	27-46-02-01
ECLASS 15.0	27-46-02-01		

SC 3.81/02/135G 3.2SN OR BX

Weidmüller Interface GmbH & Co. KG
Klingenbergstraße 26
D-32758 Detmold
Germany

www.weidmueller.com

Drawings

Product image

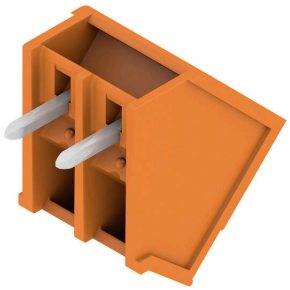

Dimensional drawing

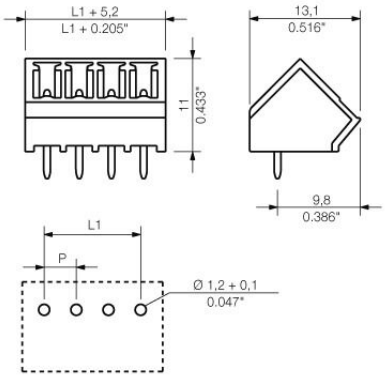

SC 3.81/02/135G 3.2SN OR BX

Weidmüller Interface GmbH & Co. KG
Klingenbergstraße 26
D-32758 Detmold
Germany

www.weidmueller.com

Accessories

Coding elements

Only connects what is supposed to be connected: the right connection at the right place.
Coding elements and locking devices clearly assign connecting elements during the manufacturing process and operation
The coding elements and locking devices are inserted prior to assembly or during the cable assembly phase.
The Weidmüller alternative: configure online using the variant configurator to precode prior to delivery.
Incorrect assembly on the circuit board and incorrect plugging of connecting elements is no longer possible.
The advantage: no troubleshooting during manufacture and no operational errors by the user.

General ordering data

Type	SC-SMT 3.81 KO GY BX	Version
Order No.	1968900000	PCB plug-in connector, Accessories, Coding element, grey, Number of
GTIN (EAN)	4032248772865	poles: 6
Qty.	100 ST	