Data sheet

IE-PI-2LC-MM

Weidmüller Interface GmbH & Co. KG
Klingenbergstraße 26
D-32758 Detmold
Germany

www.weidmueller.com

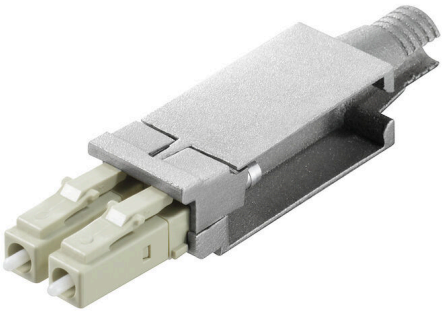

FO LC inserts for plug-in connectors ver.1 / 4 / 14

General ordering data

Version	LC insert, Plug insert 2 LC, multimode
Order No.	1962780000
Type	IE-PI-2LC-MM
GTIN (EAN)	4032248644865
Qty.	10 items
Available until	2025-04-08T00:00:00+02:00

IE-PI-2LC-MM

Weidmüller Interface GmbH & Co. KG
Klingenbergstraße 26
D-32758 Detmold
Germany

www.weidmueller.com

Technical data

Approvals

ROHS	Conform

Dimensions and weights

Depth	59 mm	Depth (inches)	2.3228 inch
Height	10.3 mm	Height (inches)	0.4055 inch
Width	13.15 mm	Width (inches)	0.5177 inch
Net weight	15 g		

Temperatures

Storage temperature		Operating temperature	-40 °C...70 °C
Installation temperature		Humidity	0...85 % rel. humidity

Environmental Product Compliance

RoHS Compliance Status	Compliant with exemption
RoHS Exemption (if applicable/known)	6c
REACH SVHC	Lead 7439-92-1
SCIP	67cf1078-beca-4687-860b-dc475a6ec24a

General data

Description of article	Plug insert 2 LC, multimode	Colour	Miscellaneous
Housing main material	PBT diecast zinc	Humidity	0...85 % rel. humidity
Protection degree	IP67 with housing	Plugging cycles	1000
Composition	Connector and flange insert for variant 1, 4 and 14 housings	Fibre type	Multimode
Insertion loss	≤ 0.4 dB	Connection 1	LC
Connection 2	Crimp	Return loss (attenuation)	≥ 30 dB
Ferrule material	Zirconia		

General standards

Connector standard	IEC 61754-20

Classifications

ETIM 8.0	EC001122	ETIM 9.0	EC001122
ETIM 10.0	EC001122	ECLASS 14.0	19-17-01-22
ECLASS 15.0	19-17-01-22		

Weidmüller Interface GmbH & Co. KG
Klingenbergstraße 26
D-32758 Detmold
Germany

www.weidmueller.com

Drawings

Dimensioned drawing

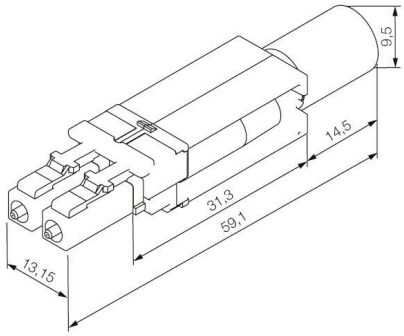

Weidmüller Interface GmbH & Co. KG
Klingenbergstraße 26
D-32758 Detmold
Germany

www.weidmueller.com

Accessories

...for fiber-optic connectors SC, ST & LC

GOF
- For fibre-optic SC/ST, IP 20 and IP 67 connectors
- For fibre-optic LC and IP 67 connectors

POF
- For polymer fibre-optic SC/ST, IP 20 and IP 67 connectors
- For fibre-optic, Profinet and Mobil cable SC/ST and IP 67 connectors

General ordering data

Type	IE-CT-LC-GOF	Version
Order No.	9205330000	Pressing tool, Hexagonal crimp
GTIN (EAN)	4032248725465	
Qty.	1 ST	