Data sheet

LMZF 5/17/135 3.5OR

Weidmüller Interface GmbH & Co. KG
Klingenbergstraße 26
D-32758 Detmold
Germany

www.weidmueller.com

Product image

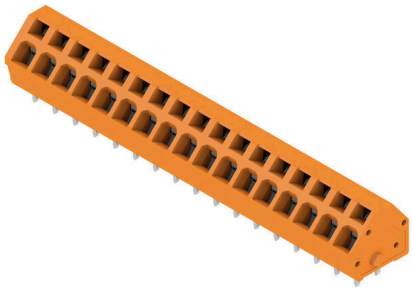

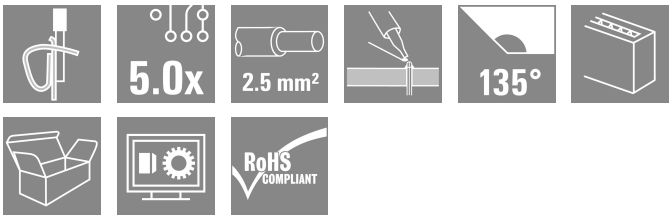

The compact installation terminal for the standard wire cross-section size of 2.5mm².
Tension clamp connection with a 135° outlet direction, in variable pitch: 5.00 - 5.08 mm (1 part with 2 pitches).
Rated data:
- 24A at 40°C / 630V (IEC) or 15A / 300V (UL)
- 0.13 - 2.5 mm² (IEC) / 26 - 14 AWG (UL)
- Flammability class according to UL 94: V0

Application benefits:
- Temperature resistant: long-term resistance up to 120°C provided by high-performance Wemid insulation material
- Adaptable: simple pitch adaptation from 5.00 to 5.08 mm (0.200 inch)
- Convenient: optional lever for simple opening of terminal point

General ordering data

Version	Printed circuit board terminals, 5.00 mm, Number of poles: 17, 135°, Solder pin length (l): 3.5 mm, tinned, orange, Tension-clamp connection, Clamping range, max. : 2.5 mm², Box
Order No.	1960180000
Type	LMZF 5/17/135 3.5OR
GTIN (EAN)	4032248651061
Qty.	50 items
Product data	IEC: 630 V / 24 A / 0.13 - 2.5 mm² UL: 300 V / 15 A / AWG 26 - AWG 14
Packaging	Box

LMZF 5/17/135 3.5OR

Weidmüller Interface GmbH & Co. KG
Klingenbergstraße 26
D-32758 Detmold
Germany

www.weidmueller.com

Technical data

Approvals

Approvals	
ROHS	Conform
UL File Number Search	UL Website
Certificate No. (cURus)	E60693

Dimensions and weights

Depth	14.5 mm	Depth (inches)	0.5709 inch
Height	16.4 mm	Height (inches)	0.6457 inch
Height of lowest version	12.9 mm	Width	87.5 mm
Width (inches)	3.4449 inch	Net weight	18.66 g

Environmental Product Compliance

RoHS Compliance Status	Compliant without exemption
REACH SVHC	No SVHC above 0.1 wt%

System parameters

Product family	OMNIMATE Signal - series LMZF	Wire connection method	Tension-clamp connection
Mounting onto the PCB	THT solder connection	Conductor outlet direction	135°
Pitch in mm (P)	5.00 mm	Pitch in inches (P)	0.197 "
Number of poles	17	Pin series quantity	1
Fitted by customer	No	Number of rows	1
Max. adjacent poles per row	48	Solder pin length (l)	3.5 mm
Solder pin dimensions	0.8 x 0.8 mm	Solder eyelet hole diameter (D)	1.3 mm
Solder eyelet hole diameter tolerance (D)	+ 0,1 mm	Number of solder pins per pole	2
Screwdriver blade	0.4 x 2.5	Screwdriver blade standard	DIN 5264-A
Stripping length	6 mm	L1 in mm	80.00 mm
L1 in inches	3.150 "	Touch-safe protection acc. to DIN VDE 0470	IP 20
Touch-safe protection acc. to DIN VDE 57 106	Safe from finger touch	Protection degree	IP20

Material data

Insulating material	Wemid (PA)	Colour	orange
Colour chart (similar)	RAL 2000	Insulating material group	I
Comparative Tracking Index (CTI)	≥ 600	Moisture Level (MSL)	
UL 94 flammability rating	V-0	Contact material	Copper alloy
Contact surface	tinned	Coating	4-10 µm SN
Tinning type	matt	Layer structure of solder connection	4...6 µm Sn / 5...8 µm
Storage temperature, min.	-40 °C	Storage temperature, max.	70 °C
Operating temperature, min.	-50 °C	Operating temperature, max.	120 °C
Temperature range, installation, min.	-25 °C	Temperature range, installation, max.	120 °C

Conductors suitable for connection

Clamping range, min.	0.13 mm²
Clamping range, max.	2.5 mm²

LMZF 5/17/135 3.5OR

Weidmüller Interface GmbH & Co. KG
Klingenbergstraße 26
D-32758 Detmold
Germany

www.weidmueller.com

Technical data

Wire connection cross section AWG, min.	AWG 26
Wire connection cross section AWG, max.	AWG 14
Solid, min. H05(07) V-U	0.13 mm²
Solid, max. H05(07) V-U	2.5 mm²
Flexible, min. H05(07) V-K	0.13 mm²
Flexible, max. H05(07) V-K	2.5 mm²
w. plastic collar ferrule, DIN 46228 pt 4, min.	0.25 mm²
w. plastic collar ferrule, DIN 46228 pt 4, max.	1.5 mm²
w. wire end ferrule, DIN 46228 pt 1, min.	0.25 mm²
w. wire end ferrule, DIN 46228 pt 1, max.	1.5 mm²

Clampable conductor	Cross-section for conductor connection	Type	fine-wired	
		nominal	0.5 mm²	
	wire end ferrule	Stripping length	nominal	8 mm
		Recommended wire-end ferrule	H0,5/12 OR	
		Stripping length	nominal	6 mm
		Recommended wire-end ferrule	H0,5/6	
	Cross-section for conductor connection	Type	fine-wired	
		nominal	0.75 mm²	
	wire end ferrule	Stripping length	nominal	8 mm
		Recommended wire-end ferrule	H0,75/12 W	
		Stripping length	nominal	6 mm
		Recommended wire-end ferrule	H0,75/6	
	Cross-section for conductor connection	Type	fine-wired	
		nominal	1 mm²	
	wire end ferrule	Stripping length	nominal	8 mm
		Recommended wire-end ferrule	H1,0/12 GE	
		Stripping length	nominal	6 mm
		Recommended wire-end ferrule	H1,0/6	
	Cross-section for conductor connection	Type	fine-wired	
		nominal	0.25 mm²	
	wire end ferrule	Stripping length	nominal	8 mm
		Recommended wire-end ferrule	H0,25/10 HBL	
		Stripping length	nominal	5 mm
		Recommended wire-end ferrule	H0,25/5	
	Cross-section for conductor connection	Type	fine-wired	
		nominal	0.34 mm²	
	wire end ferrule	Stripping length	nominal	8 mm
		Recommended wire-end ferrule	H0,34/10 TK	
Reference text	Length of ferrules is to be chosen depending on the product and the rated voltage., The outside diameter of the plastic collar should not be larger than the pitch (P)			

LMZF 5/17/135 3.5OR

Weidmüller Interface GmbH & Co. KG
Klingenbergstraße 26
D-32758 Detmold
Germany

www.weidmueller.com

Technical data

Rated data acc. to IEC

tested acc. to standard	IEC 60664-1, IEC 61984	Rated current, min. number of poles (Tu=20°C)	24 A
Rated current, max. number of poles (Tu=20°C)	24 A	Rated current, min. number of poles (Tu=40°C)	24 A
Rated current, max. number of poles (Tu=40°C)	24 A	Rated voltage for surge voltage class / pollution degree II/2	630 V
Rated voltage for surge voltage class / pollution degree III/2	320 V	Rated voltage for surge voltage class / pollution degree III/3	250 V
Rated impulse voltage for surge voltage class/ pollution degree II/2	4 kV	Rated impulse voltage for surge voltage class/ pollution degree III/2	4 kV
Rated impulse voltage for surge voltage class/ contamination degree III/3	4 kV		

Rated data acc. to CSA

Institute (CSA)	CSA	Certificate No. (CSA)	200039-1815154
Rated voltage (Use group B / CSA)	300 V	Rated voltage (Use group D / CSA)	300 V
Rated current (Use group B / CSA)	10 A	Rated current (Use group D / CSA)	10 A
Wire cross-section, AWG, min.	AWG 26	Wire cross-section, AWG, max.	AWG 14
Reference to approval values	Specifications are maximum values, details - see approval certificate.		

Rated data acc. to UL 1059

Institute (cURus)	CURUS	Certificate No. (cURus)	E60693
Rated voltage (Use group B / UL 1059)	300 V	Rated voltage (Use group D / UL 1059)	300 V
Rated current (Use group B / UL 1059)	15 A	Rated current (Use group D / UL 1059)	10 A
Wire cross-section, AWG, min.	AWG 26	Wire cross-section, AWG, max.	AWG 14
Reference to approval values	Specifications are maximum values, details - see approval certificate.		

Packing

Packaging	Box	VPE length	275.00 mm
VPE width	280.00 mm	VPE height	55.00 mm

Important note

IPC conformity	Conformity: The products are developed, manufactured and delivered according international recognized standards and norms and comply with the assured properties in the data sheet resp. fulfill decorative properties in accordance with IPC-A-610 "Class 2". Further claims on the products can be evaluated on request.
Notes	• Rated current related to rated cross-section & min. No. of poles. • Wire end ferrule without plastic collar to DIN 46228/1 • Wire end ferrule with plastic collar to DIN 46228/4 • P on drawing = pitch • Rated data refer only to the component itself. Clearance and creepage distances to other components are to be designed in accordance with the relevant application standards. • Long term storage of the product with average temperature of 50 °C and maximum humidity 70%, 36 months

Classifications

ETIM 8.0	EC002643	ETIM 9.0	EC002643
ETIM 10.0	EC002643	ECLASS 14.0	27-46-01-01
ECLASS 15.0	27-46-01-01		

LMZF 5/17/135 3.5OR

Weidmüller Interface GmbH & Co. KG
Klingenbergstraße 26
D-32758 Detmold
Germany

www.weidmueller.com

Drawings

Product image

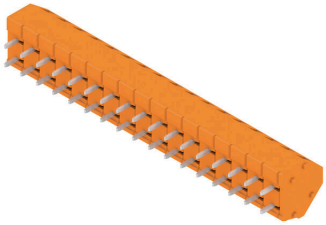

Dimensional drawing

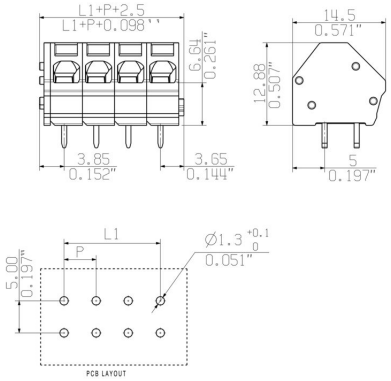
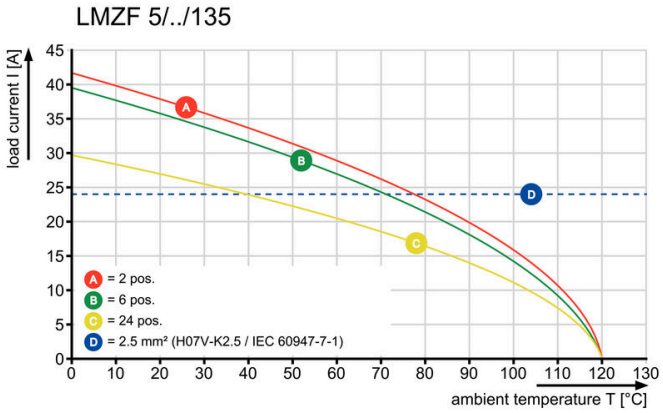
Graph