Data sheet

BLZP 5.00HC/16/180F SN OR BX

Weidmüller Interface GmbH & Co. KG
Klingenbergstraße 26
D-32758 Detmold
Germany

www.weidmueller.com

Product image

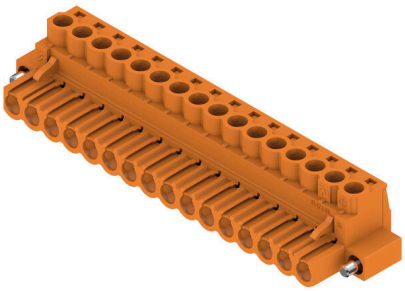

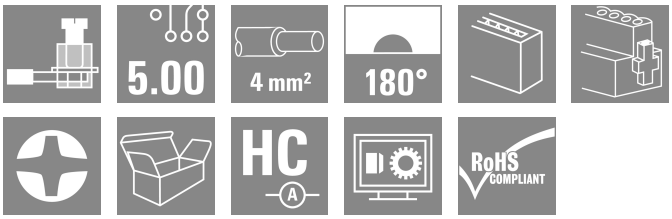

Female plug with clamping-yoke screw system for connecting wires with straight (180°) outlet direction. The female connectors provide space for labelling and can be coded. Fastened by means of a flange or release latch. The also provide an integrated plus/minus screw, protection against faulty insertion of the wire, and they are delivered with open clamping yokes. HC = High Current.

General ordering data

Version	PCB plug-in connector, female plug, 5.00 mm, Number of poles: 16, 180°, Clamping yoke connection, Clamping range, max. : 4 mm², Box
Order No.	1955660000
Type	BLZP 5.00HC/16/180F SN OR BX
GTIN (EAN)	4032248634194
Qty.	18 items
Product data	IEC: 400 V / 23 A / 0.2 - 4 mm² UL: 300 V / 20 A / AWG 26 - AWG 12
Packaging	Box

BLZP 5.00HC/16/180F SN OR BX

Weidmüller Interface GmbH & Co. KG
Klingenbergstraße 26
D-32758 Detmold
Germany

www.weidmueller.com

Technical data

Approvals

Approvals	
ROHS	Conform
UL File Number Search	UL Website
Certificate No. (cURus)	E60693

Dimensions and weights

Depth	20.1 mm	Depth (inches)	0.7913 inch
Height	16.1 mm	Height (inches)	0.6339 inch
Width	90 mm	Width (inches)	3.5433 inch
Net weight	27.56 g		

Environmental Product Compliance

RoHS Compliance Status	Compliant without exemption	
REACH SVHC	No SVHC above 0.1 wt%	
Product Carbon Footprint	Cradle to gate	0,425 kg CO2 eq.

System Parameters

Product family	OMNIMATE Signal - series BL/SL 5.00			
Type of connection	Field connection			
Wire connection method	Clamping yoke connection			
Pitch in mm (P)	5.00 mm			
Pitch in inches (P)	0.197 "			
Conductor outlet direction	180°			
Number of poles	16			
L1 in mm	75.00 mm			
L1 in inches	2.955 "			
Number of rows	1			
Pin series quantity	1			
Rated cross-section	4 mm²			
Touch-safe protection acc. to DIN VDE 57 106	Safe from finger touch			
Touch-safe protection acc. to DIN VDE 0470	IP20 plugged/ IP10 unplugged			
Protection degree	IP20			
Volume resistance	≤5 mΩ			
Can be coded	Yes			
Stripping length	7 mm			
Clamping screw	M 2.5			
Screwdriver blade	0.6 x 3.5, PH 1, PZ 1			
Screwdriver blade standard	DIN 5264, ISO 8764/2-PH, ISO 8764/2-PZ			
Plugging cycles	25			
Plugging force/pole, max.	10 N			
Pulling force/pole, max.	9 N			
Tightening torque	Torque type	Wire connection		
	Usage information	Tightening torque	min.	0.4 Nm
			max.	0.5 Nm
	Torque type	Screw flange		
	Usage information	Tightening torque	min.	0.2 Nm
			max.	0.25 Nm

BLZP 5.00HC/16/180F SN OR BX

Weidmüller Interface GmbH & Co. KG
Klingenbergstraße 26
D-32758 Detmold
Germany

www.weidmueller.com

Technical data

Material data

Insulating material	PBT	Colour	orange
Colour chart (similar)	RAL 2000	Insulating material group	IIIa
Comparative Tracking Index (CTI)	≥ 200	Insulation resistance	≥ 10⁸ Ω
Moisture Level (MSL)		UL 94 flammability rating	V-0
Contact material	Cu-alloy	Contact surface	tinned
Layer structure of plug contact	4...8 µm Sn hot-dip tinned	Storage temperature, min.	-40 °C
Storage temperature, max.	70 °C	Operating temperature, min.	-50 °C
Operating temperature, max.	100 °C	Temperature range, installation, min.	-25 °C
Temperature range, installation, max.	100 °C		

Conductors suitable for connection

Clamping range, min.	0.13 mm²
Clamping range, max.	4 mm²
Wire connection cross section AWG, min.	AWG 30
Wire connection cross section AWG, max.	AWG 12
Solid, min. H05(07) V-U	0.2 mm²
Solid, max. H05(07) V-U	4 mm²
Flexible, min. H05(07) V-K	0.2 mm²
Flexible, max. H05(07) V-K	4 mm²
w. plastic collar ferrule, DIN 46228 pt 4, min.	0.2 mm²
w. plastic collar ferrule, DIN 46228 pt 4, max.	2.5 mm²
w. wire end ferrule, DIN 46228 pt 1, min.	0.2 mm²
w. wire end ferrule, DIN 46228 pt 1, max.	4 mm²
Plug gauge in accordance with EN 60999 a x b; ø	2.8 mm x 2.4 mm

Clampable conductor	Cross-section for conductor connection	Type	fine-wired	
		nominal	0.5 mm²	
	wire end ferrule	Stripping length	nominal	6 mm
		Recommended wire-end ferrule	H0,5/6	
	Cross-section for conductor connection	Type	fine-wired	
		nominal	1 mm²	
	wire end ferrule	Stripping length	nominal	6 mm
		Recommended wire-end ferrule	H1,0/6	
	Cross-section for conductor connection	Type	fine-wired	
		nominal	1.5 mm²	
	wire end ferrule	Stripping length	nominal	7 mm
		Recommended wire-end ferrule	H1,5/7	
	Cross-section for conductor connection	Type	fine-wired	
		nominal	2.5 mm²	
	wire end ferrule	Stripping length	nominal	7 mm
		Recommended wire-end ferrule	H2,5/7	
	Cross-section for conductor connection	Type	fine-wired	
		nominal	0.75 mm²	
	wire end ferrule	Stripping length	nominal	6 mm
		Recommended wire-end ferrule	H0,75/6	

BLZP 5.00HC/16/180F SN OR BX

Weidmüller Interface GmbH & Co. KG
Klingenbergstraße 26
D-32758 Detmold
Germany

www.weidmueller.com

Technical data

Reference text	The outside diameter of the plastic collar should not be larger than the pitch (P), Length of ferrules is to be chosen depending on the product and the rated voltage.

Rated data acc. to IEC

tested acc. to standard	IEC 60664-1, IEC 61984	Rated current, min. number of poles (Tu=20°C)	23 A
Rated current, max. number of poles (Tu=20°C)	18 A	Rated current, min. number of poles (Tu=40°C)	21 A
Rated current, max. number of poles (Tu=40°C)	16 A	Rated voltage for surge voltage class / pollution degree II/2	400 V
Rated voltage for surge voltage class / pollution degree III/2	320 V	Rated voltage for surge voltage class / pollution degree III/3	250 V
Rated impulse voltage for surge voltage class/ pollution degree II/2	4 kV	Rated impulse voltage for surge voltage class/ pollution degree III/2	4 kV
Rated impulse voltage for surge voltage class/ contamination degree III/3	4 kV	Short-time withstand current resistance	3 x 1s with 120 A

Rated data acc. to CSA

Institute (CSA)	CSA	Certificate No. (CSA)	200039-1121690
Rated voltage (Use group B / CSA)	300 V	Rated voltage (Use group C / CSA)	50 V
Rated voltage (Use group D / CSA)	300 V	Rated current (Use group B / CSA)	20 A
Rated current (Use group D / CSA)	20 A	Wire cross-section, AWG, min.	AWG 30
Wire cross-section, AWG, max.	AWG 12	Reference to approval values	Specifications are maximum values, details - see approval certificate.

Rated data acc. to UL 1059

Institute (cURus)	CURUS	Certificate No. (cURus)	E60693
Rated voltage (Use group B / UL 1059)	300 V	Rated voltage (Use group D / UL 1059)	300 V
Rated current (Use group B / UL 1059)	20 A	Rated current (Use group D / UL 1059)	10 A
Wire cross-section, AWG, min.	AWG 26	Wire cross-section, AWG, max.	AWG 12
Reference to approval values	Specifications are maximum values, details - see approval certificate.		

Packing

Packaging	Box	VPE length	240.00 mm
VPE width	180.00 mm	VPE height	20.00 mm

Important note

IPC conformity	Conformity: The products are developed, manufactured and delivered according international recognized standards and norms and comply with the assured properties in the data sheet resp. fulfill decorative properties in accordance with IPC-A-610 "Class 2". Further claims on the products can be evaluated on request.
Notes	• Additional variants on request • Gold-plated contact surfaces on request • Rated current related to rated cross-section & min. No. of poles. • Wire end ferrule without plastic collar to DIN 46228/1 • Wire end ferrule with plastic collar to DIN 46228/4 • P on drawing = pitch • Rated data refer only to the component itself. Clearance and creepage distances to other components are to be designed in accordance with the relevant application standards. • In accordance with IEC 61984, OMNIMATE-connectors are connectors without breaking capacity (COC). During designated use, connectors are not allowed to be engaged or disengaged when live or under load • Long term storage of the product with average temperature of 50 °C and maximum humidity 70%, 36 months

BLZP 5.00HC/16/180F SN OR BX

Weidmüller Interface GmbH & Co. KG
Klingenbergstraße 26
D-32758 Detmold
Germany

www.weidmueller.com

Technical data

Classifications

ETIM 8.0	EC002638	ETIM 9.0	EC002638
ETIM 10.0	EC002638	ECLASS 14.0	27-46-02-02
ECLASS 15.0	27-46-02-02		

BLZP 5.00HC/16/180F SN OR BX

Weidmüller Interface GmbH & Co. KG
Klingenbergstraße 26
D-32758 Detmold
Germany

www.weidmueller.com

Drawings

Product image

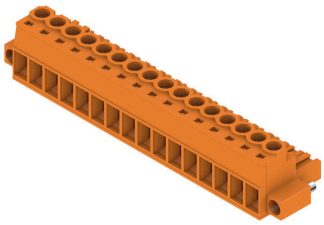

Dimensional drawing

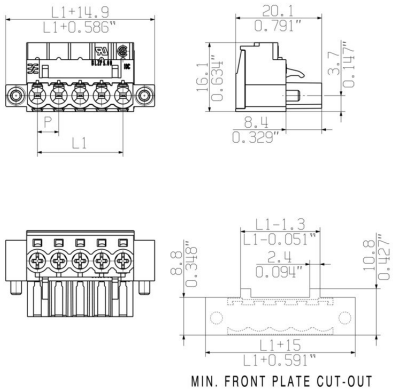

Graph

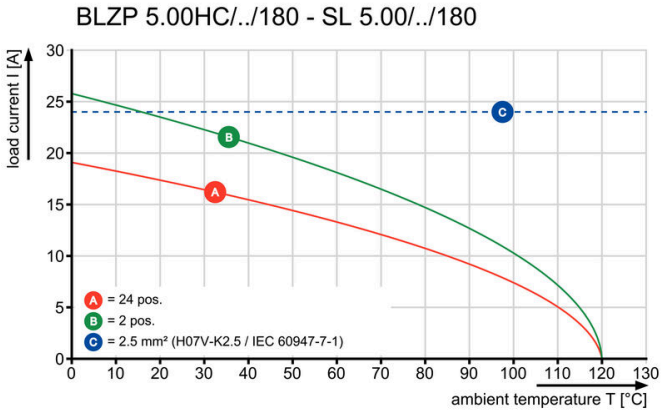

BLZP 5.00HC/16/180F SN OR BX

Weidmüller Interface GmbH & Co. KG
Klingenbergstraße 26
D-32758 Detmold
Germany

www.weidmueller.com

Accessories

Strain reliefs

For frequent load changes: the "trailer coupling" for plug-in connectors.
The strain relief can do more than just relieve the strain on conductors:
Simply clip onto the plug and
- bundle conductors
- guide cables
- use as a connection and disconnection aid

No damage to the connecting points, clear, tidy wiring and easy to handle.
User advantages: permanent heavy-duty connections for harsh industrial environments and convenient operation ensure improved system availability.

General ordering data

Type	BLZ 5.00 ZE04 OR BX	Version
Order No.	1652100000	PCB plug-in connector, Accessories, Strain relief, orange, Number of
GTIN (EAN)	4008190401771	poles: 4
Qty.	50 ST	
Type	BLZ 5.00 ZE08 OR BX	Version
Order No.	1652040000	PCB plug-in connector, Accessories, Strain relief, orange, Number of
GTIN (EAN)	4008190401719	poles: 8
Qty.	50 ST	
Type	BLZ 5.00 ZE08 BK BX	Version
Order No.	1652060000	PCB plug-in connector, Accessories, Strain relief, black, Number of
GTIN (EAN)	4008190401733	poles: 8
Qty.	50 ST	

Coding elements

Only connects what is supposed to be connected: the right connection at the right place.
Coding elements and locking devices clearly assign connecting elements during the manufacturing process and operation
The coding elements and locking devices are inserted prior to assembly or during the cable assembly phase.
The Weidmüller alternative: configure online using the variant configurator to precode prior to delivery.
Incorrect assembly on the circuit board and incorrect plugging of connecting elements is no longer possible.
The advantage: no troubleshooting during manufacture and no operational errors by the user.

General ordering data

Type	BLZ/SL KO OR BX	Version
Order No.	1573010000	PCB plug-in connector, Accessories, Coding element, orange, Number
GTIN (EAN)	4008190048396	of poles: 1
Qty.	100 ST	
Type	BLZ/SL KO BK BX	Version
Order No.	1545710000	PCB plug-in connector, Accessories, Coding element, black, Number
GTIN (EAN)	4008190087142	of poles: 1
Qty.	50 ST	

BLZP 5.00HC/16/180F SN OR BX

Weidmüller Interface GmbH & Co. KG
Klingenbergstraße 26
D-32758 Detmold
Germany

www.weidmueller.com

Accessories

Slotted screwdriver

Slotted screwdriver with rounded blade SD DIN 5265, ISO 2380/2, output to DIN 5264, ISO 2380/1. ChromTop tip, SoftFinish grip

General ordering data

Type	SDS 0.6X3.5X100	Version
Order No.	2749340000	Screwdriver, Blade width (B): 3.5 mm, Blade length: 100 mm, Blade thickness (A): 0.6 mm
GTIN (EAN)	4050118895568	
Qty.	1 ST	
Type	SDIS 0.6X3.5X100	Version
Order No.	2749810000	Screwdriver, Blade width (B): 3.5 mm, Blade length: 100 mm, Blade thickness (A): 0.6 mm
GTIN (EAN)	4050118897012	
Qty.	1 ST	

Crosshead screwdriver Phillips

Crosshead screwdriver, Phillips, SDK PH DIN 5262, ISO 8764/2-PH, output to ISO 8764-PH, ChromTop tip, SoftFinish grip

General ordering data

Type	SDK PH1 X 80	Version
Order No.	2749410000	Screwdriver, Blade width (B): 4.5 mm, 80 mm, Blade thickness (A): 1
GTIN (EAN)	4050118895636	
Qty.	1 ST	

Crosshead screwdriver Pozidriv

Crosshead screwdriver, Pozidriv, SDK PZ DIN 5262, ISO 8764/2-PZ, output to ISO 8764/1-PZ, ChromTop tip, SoftFinish grip

BLZP 5.00HC/16/180F SN OR BX

Weidmüller Interface GmbH & Co. KG
Klingenbergstraße 26
D-32758 Detmold
Germany

www.weidmueller.com

Accessories

General ordering data

Type	SDK PZ1 X 80	Version
Order No.	2749440000	Screwdriver, Blade width (B): 14.5 mm, 80 mm, Blade thickness (A): 1
GTIN (EAN)	4050118895667	
Qty.	1 ST	

BLZP 5.00HC/16/180F SN OR BX

Weidmüller Interface GmbH & Co. KG
Klingenbergstraße 26
D-32758 Detmold
Germany

www.weidmueller.com

Counterpart

SL-SMT 5.00HC/180LF Box

High-temperature-resistant pin header, packed in box or tape. On tape, with 1.5 mm solder pin, optimised for automatic assembly. 3.2 mm solder pin suitable for reflow and wave soldering. The pin headers provide space for labelling and can be coded. HC = High Current.

General ordering data

Type	SL-SMT 5.00HC/16/180LF ...	Version
Order No.	1796920000	PCB plug-in connector, male header, Solder flange, THT/THR solder
GTIN (EAN)	4032248237548	connection, 5.00 mm, Number of poles: 16, 180°, Solder pin length
Qty.	18 ST	(l): 1.5 mm, tinned, black, Box
Type	SL-SMT 5.00HC/16/180LF ...	Version
Order No.	1841530000	PCB plug-in connector, male header, Solder flange, THT/THR solder
GTIN (EAN)	4032248352432	connection, 5.00 mm, Number of poles: 16, 180°, Solder pin length
Qty.	18 ST	(l): 3.2 mm, tinned, black, Box

SL-SMT 5.00HC/90LF Box

High-temperature-resistant pin header, packed in box or tape. On tape, with 1.5 mm solder pin, optimised for automatic assembly. 3.2 mm solder pin suitable for reflow and wave soldering. The pin headers provide space for labelling and can be coded. HC = High Current.

General ordering data

Type	SL-SMT 5.00HC/16/90LF 1...	Version
Order No.	1797370000	PCB plug-in connector, male header, Solder flange, THT/THR solder
GTIN (EAN)	4032248238156	connection, 5.00 mm, Number of poles: 16, 90°, Solder pin length (l):
Qty.	18 ST	1.5 mm, tinned, black, Box
Type	SL-SMT 5.00HC/16/90LF 3...	Version
Order No.	1840490000	PCB plug-in connector, male header, Solder flange, THT/THR solder
GTIN (EAN)	4032248351336	connection, 5.00 mm, Number of poles: 16, 90°, Solder pin length (l):
Qty.	18 ST	3.2 mm, tinned, black, Box

BLZP 5.00HC/16/180F SN OR BX

Weidmüller Interface GmbH & Co. KG
Klingenbergstraße 26
D-32758 Detmold
Germany

www.weidmueller.com

Counterpart

SLDV-THR 5.00/180F

High-temperature resistant, double level, laterally offset, male connector with flange or solder flange. 1.5 mm solder pin is suitable for reflow soldering. 3.2 mm solder pin suitable for reflow and wave soldering. The pin headers provide space for labelling and can be coded.

General ordering data

Type	SLDV-THR 5.00/32/180F 3...	Version
Order No.	1881400000	PCB plug-in connector, male header, Flange, THT/THR solder
GTIN (EAN)	4032248482740	connection, 5.00 mm, Number of poles: 32, 180°, Solder pin length
Qty.	10 ST	(l): 3.2 mm, tinned, black, Box

SLDV-THR 5.00/180FLF

High-temperature resistant, double level, laterally offset, closed ended male header, with solder flange option. 1.5 mm solder pin suitable for reflow soldering. 3.2 mm solder pin suitable for reflow and wave soldering. The pin headers provide space for labelling and can be coded.

General ordering data

Type	SLDV-THR 5.00/32/180FLF...	Version
Order No.	1895600000	PCB plug-in connector, male header, Flange / Solder flange, THT/THR
GTIN (EAN)	4032248510344	solder connection, 5.00 mm, Number of poles: 32, 180°, Solder pin
Qty.	10 ST	length (l): 1.5 mm, tinned, black, Box