Data sheet

BLZP 5.00HC/05/180 SN BK BX

Weidmüller Interface GmbH & Co. KG
Klingenbergstraße 26
D-32758 Detmold
Germany

www.weidmueller.com

Product image

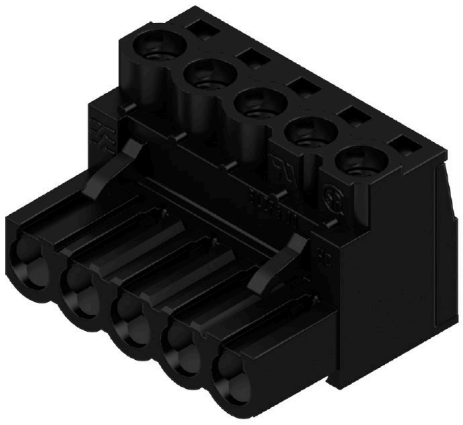

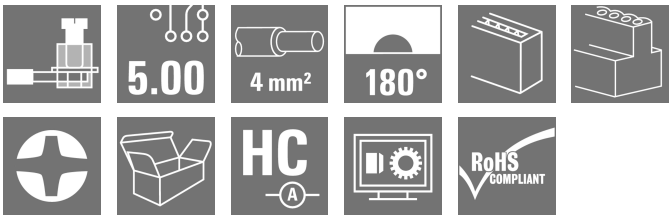

Female plug with clamping-yoke screw system for connecting wires with straight (180°) outlet direction. The female connectors provide space for labelling and can be coded. Fastened by means of a flange or release latch. The also provide an integrated plus/minus screw, protection against faulty insertion of the wire, and they are delivered with open clamping yokes. HC = High Current.

General ordering data

Version	PCB plug-in connector, female plug, 5.00 mm, Number of poles: 5, 180°, Clamping yoke connection, Clamping range, max. : 4 mm², Box
Order No.	1955540000
Type	BLZP 5.00HC/05/180 SN BK BX
GTIN (EAN)	4032248634033
Qty.	72 items
Product data	IEC: 400 V / 23 A / 0.2 - 4 mm² UL: 300 V / 20 A / AWG 26 - AWG 12
Packaging	Box

BLZP 5.00HC/05/180 SN BK BX

Weidmüller Interface GmbH & Co. KG
Klingenbergstraße 26
D-32758 Detmold
Germany

www.weidmueller.com

Technical data

Approvals

Approvals	
ROHS	Conform
UL File Number Search	UL Website
Certificate No. (cURus)	E60693

Dimensions and weights

Depth	20.1 mm	Depth (inches)	0.7913 inch
Height	16 mm	Height (inches)	0.6299 inch
Width	25 mm	Width (inches)	0.9842 inch
Net weight	8.69 g		

Environmental Product Compliance

RoHS Compliance Status	Compliant without exemption
REACH SVHC	No SVHC above 0.1 wt%

System Parameters

Product family	OMNIMATE Signal - series BL/SL 5.00			
Type of connection	Field connection			
Wire connection method	Clamping yoke connection			
Pitch in mm (P)	5.00 mm			
Pitch in inches (P)	0.197 "			
Conductor outlet direction	180°			
Number of poles	5			
L1 in mm	20.00 mm			
L1 in inches	0.788 "			
Number of rows	1			
Pin series quantity	1			
Rated cross-section	4 mm²			
Touch-safe protection acc. to DIN VDE 57 106	Safe from finger touch			
Touch-safe protection acc. to DIN VDE 0470	IP20 plugged/ IP10 unplugged			
Protection degree	IP20			
Volume resistance	≤5 mΩ			
Can be coded	Yes			
Stripping length	7 mm			
Clamping screw	M 2.5			
Screwdriver blade	0.6 x 3.5, PH 1, PZ 1			
Screwdriver blade standard	DIN 5264, ISO 8764/2-PH, ISO 8764/2-PZ			
Plugging cycles	25			
Plugging force/pole, max.	10 N			
Pulling force/pole, max.	9 N			
Tightening torque	Torque type	Wire connection		
	Usage information	Tightening torque	min.	0.4 Nm
			max.	0.5 Nm

BLZP 5.00HC/05/180 SN BK BX

Weidmüller Interface GmbH & Co. KG
Klingenbergstraße 26
D-32758 Detmold
Germany

www.weidmueller.com

Technical data

Material data

Insulating material	PBT	Colour	black
Colour chart (similar)	RAL 9011	Insulating material group	IIIa
Comparative Tracking Index (CTI)	≥ 200	Insulation resistance	≥ 10⁸ Ω
Moisture Level (MSL)		UL 94 flammability rating	V-0
Contact material	Cu-alloy	Contact surface	tinned
Layer structure of plug contact	4...8 µm Sn hot-dip tinned	Storage temperature, min.	-40 °C
Storage temperature, max.	70 °C	Operating temperature, min.	-50 °C
Operating temperature, max.	100 °C	Temperature range, installation, min.	-25 °C
Temperature range, installation, max.	100 °C		

Conductors suitable for connection

Clamping range, min.	0.13 mm²
Clamping range, max.	4 mm²
Wire connection cross section AWG, min.	AWG 30
Wire connection cross section AWG, max.	AWG 12
Solid, min. H05(07) V-U	0.2 mm²
Solid, max. H05(07) V-U	4 mm²
Stranded, min. H07V-R	0.2 mm²
Stranded, max. H07V-R	4 mm²
Flexible, min. H05(07) V-K	0.2 mm²
Flexible, max. H05(07) V-K	4 mm²
w. plastic collar ferrule, DIN 46228 pt 4, min.	0.2 mm²
w. plastic collar ferrule, DIN 46228 pt 4, max.	2.5 mm²
w. wire end ferrule, DIN 46228 pt 1, min.	0.2 mm²
w. wire end ferrule, DIN 46228 pt 1, max.	2.5 mm²
Plug gauge in accordance with EN 60999 a x b; ø	2.8 mm x 2.4 mm

Clampable conductor	Cross-section for conductor connection	Type	fine-wired	
		nominal	0.5 mm²	
	wire end ferrule	Stripping length	nominal	6 mm
		Recommended wire-end ferrule	H0,5/6	
	Cross-section for conductor connection	Type	fine-wired	
		nominal	1 mm²	
	wire end ferrule	Stripping length	nominal	6 mm
		Recommended wire-end ferrule	H1,0/6	
	Cross-section for conductor connection	Type	fine-wired	
		nominal	1.5 mm²	
	wire end ferrule	Stripping length	nominal	7 mm
		Recommended wire-end ferrule	H1,5/7	
	Cross-section for conductor connection	Type	fine-wired	
		nominal	2.5 mm²	
	wire end ferrule	Stripping length	nominal	7 mm
		Recommended wire-end ferrule	H2,5/7	
	Cross-section for conductor connection	Type	fine-wired	
		nominal	0.75 mm²	
	wire end ferrule	Stripping length	nominal	6 mm

BLZP 5.00HC/05/180 SN BK BX

Weidmüller Interface GmbH & Co. KG
Klingenbergstraße 26
D-32758 Detmold
Germany

www.weidmueller.com

Technical data

		Recommended wire-end ferrule	H0,75/6
Reference text	The outside diameter of the plastic collar should not be larger than the pitch (P), Length of ferrules is to be chosen depending on the product and the rated voltage.		

Rated data acc. to IEC

tested acc. to standard	IEC 60664-1, IEC 61984	Rated current, min. number of poles (Tu=20°C)	23 A
Rated current, max. number of poles (Tu=20°C)	18 A	Rated current, min. number of poles (Tu=40°C)	21 A
Rated current, max. number of poles (Tu=40°C)	16 A	Rated voltage for surge voltage class / pollution degree II/2	400 V
Rated voltage for surge voltage class / pollution degree III/2	320 V	Rated voltage for surge voltage class / pollution degree III/3	250 V
Rated impulse voltage for surge voltage class/ pollution degree II/2	4 kV	Rated impulse voltage for surge voltage class/ pollution degree III/2	4 kV
Rated impulse voltage for surge voltage class/ contamination degree III/3	4 kV	Short-time withstand current resistance	3 x 1s with 120 A

Rated data acc. to CSA

Institute (CSA)	CSA	Certificate No. (CSA)	200039-1121690
Rated voltage (Use group B / CSA)	300 V	Rated voltage (Use group C / CSA)	50 V
Rated voltage (Use group D / CSA)	300 V	Rated current (Use group B / CSA)	20 A
Rated current (Use group D / CSA)	20 A	Wire cross-section, AWG, min.	AWG 30
Wire cross-section, AWG, max.	AWG 12	Reference to approval values	Specifications are maximum values, details - see approval certificate.

Rated data acc. to UL 1059

Institute (cURus)	CURUS	Certificate No. (cURus)	E60693
Rated voltage (Use group B / UL 1059)	300 V	Rated voltage (Use group D / UL 1059)	300 V
Rated current (Use group B / UL 1059)	20 A	Rated current (Use group D / UL 1059)	10 A
Wire cross-section, AWG, min.	AWG 26	Wire cross-section, AWG, max.	AWG 12
Reference to approval values	Specifications are maximum values, details - see approval certificate.		

Packing

Packaging	Box	VPE length	349.00 mm
VPE width	136.00 mm	VPE height	31.00 mm

Important note

IPC conformity	Conformity: The products are developed, manufactured and delivered according international recognized standards and norms and comply with the assured properties in the data sheet resp. fulfill decorative properties in accordance with IPC-A-610 "Class 2". Further claims on the products can be evaluated on request.
Notes	• Additional variants on request • Gold-plated contact surfaces on request • Rated current related to rated cross-section & min. No. of poles. • Wire end ferrule without plastic collar to DIN 46228/1 • Wire end ferrule with plastic collar to DIN 46228/4 • P on drawing = pitch • Rated data refer only to the component itself. Clearance and creepage distances to other components are to be designed in accordance with the relevant application standards. • In accordance with IEC 61984, OMNIMATE-connectors are connectors without breaking capacity (COC). During designated use, connectors are not allowed to be engaged or disengaged when live or under load

Weidmüller Interface GmbH & Co. KG
Klingenbergstraße 26
D-32758 Detmold
Germany

www.weidmueller.com

Technical data

- Long term storage of the product with average temperature of 50 °C and maximum humidity 70%, 36 months

Classifications

ETIM 6.0	EC002638	ETIM 7.0	EC002638
ETIM 8.0	EC002638	ETIM 9.0	EC002638
ETIM 10.0	EC002638	ECLASS 9.0	27-44-03-09
ECLASS 9.1	27-44-03-09	ECLASS 10.0	27-44-03-09
ECLASS 11.0	27-46-02-02	ECLASS 12.0	27-46-02-02
ECLASS 13.0	27-46-02-02	ECLASS 14.0	27-46-02-02
ECLASS 15.0	27-46-02-02		

BLZP 5.00HC/05/180 SN BK BX

Weidmüller Interface GmbH & Co. KG
Klingenbergstraße 26
D-32758 Detmold
Germany

www.weidmueller.com

Drawings

Product image

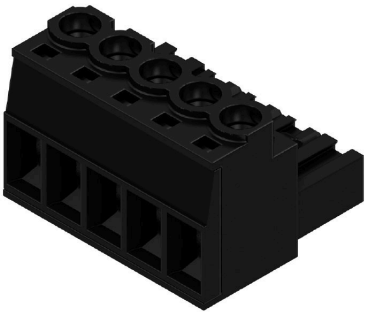

Dimensional drawing

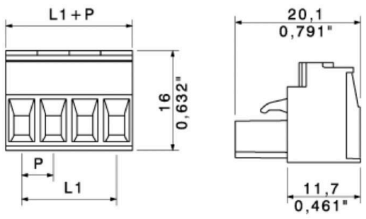

Dimensional drawing

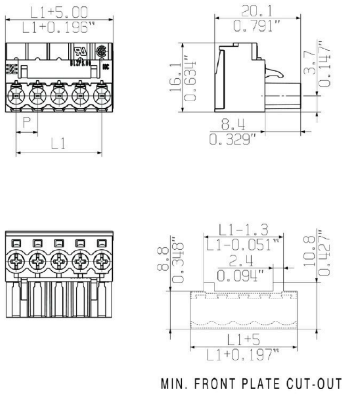
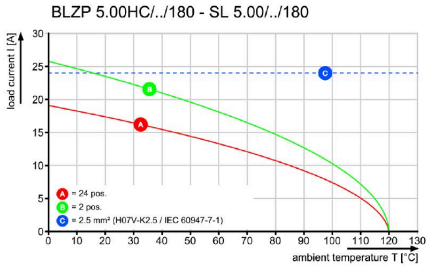
Graph