Data sheet

WGK 95F VP GY BX

Weidmüller Interface GmbH & Co. KG
Klingenbergstraße 26
D-32758 Detmold
Germany

www.weidmueller.com

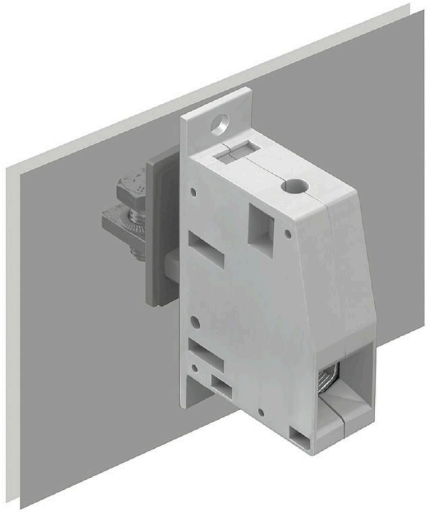

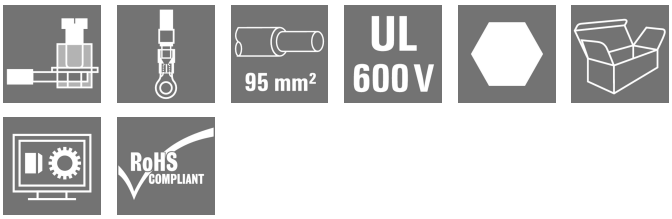

The WGK finger-proof-insulated enclosures are especially suitable as industrial electronic enclosures for frequency converters, power supplies or filter components which offer a convenient and reliable form of connection internally and externally. To match the wire guides to the installation requirements in the best possible way, Weidmüller offers two versions with horizontal (WGK) and vertical (WGKV) outlet directions.

General ordering data

Version	OMNIMATE Power - series WGK, Feed-through terminal, Rated cross-section: 95 mm², Screw connection, Wemid (PA), grey, Direct mounting, Feed-through (bushing)
Order No.	1937130000
Type	WGK 95F VP GY BX
GTIN (EAN)	4032248664726
Qty.	10 items
Product data	IEC: 1000 V / 232 A / 35 - 95 mm² UL: 600 V / 230 A / AWG 4 - AWG 4/0
Packaging	Box

WGK 95F VP GY BX

Weidmüller Interface GmbH & Co. KG
Klingenbergstraße 26
D-32758 Detmold
Germany

www.weidmueller.com

Technical data

Approvals

Approvals	
ROHS	Conform
UL File Number Search	UL Website
Certificate No. (cURus)	E60693

Dimensions and weights

Height	74 mm	Height (inches)	2.9134 inch
Height of lowest version	74 mm	Width	25 mm
Width (inches)	0.9842 inch	Length	27.4 mm
Length (inches)	1.0787 inch	Net weight	185.2 g

Environmental Product Compliance

RoHS Compliance Status	Compliant without exemption
REACH SVHC	No SVHC above 0.1 wt%

System parameters

Product family	OMNIMATE Power - series WGK	Wire connection method	Cable lug: ring cable / spade lug
Conductor outlet direction	180°	Number of poles	1
Pin series quantity	1	Fitted by customer	No
Tightening torque, min.	15 Nm	Tightening torque, max.	20 Nm
Clamping screw	M8/Hexagon	Stripping length	27 mm
Touch-safe protection acc. to DIN VDE 0470	IP 20	Protection degree	IP20
Type of connection 1	Clamping yoke	Type of connection 2	Screw connection

Material data

Insulating material	Wemid (PA)	Colour	grey
Colour chart (similar)	RAL 7035	Moisture Level (MSL)	
UL 94 flammability rating	V-0	Contact material	Cu-alloy
Contact surface	tinned	Storage temperature, min.	-40 °C
Storage temperature, max.	70 °C	Operating temperature, min.	-50 °C
Operating temperature, max.	120 °C	Temperature range, installation, min.	-25 °C
Temperature range, installation, max.	120 °C		

Conductors suitable for connection

Clamping range, min.	35 mm²	Clamping range, max.	95 mm²
Wire connection cross section AWG, min.	AWG 4	Wire connection cross section AWG, max.	AWG 4/0
Solid, min. H05(07) V-U	35 mm²	Solid, max. H05(07) V-U	95 mm²
Stranded, min. H07V-R	35 mm²	Stranded, max. H07V-R	95 mm²
Flexible, min. H05(07) V-K	35 mm²	Flexible, max. H05(07) V-K	95 mm²
w. plastic collar ferrule, DIN 46228 pt 4, min.	35 mm²	w. plastic collar ferrule, DIN 46228 pt 4, max.	95 mm²
w. wire end ferrule, DIN 46228 pt 1, min.	35 mm²	w. wire end ferrule, DIN 46228 pt 1, max.	95 mm²
Reference text	Length of ferrules is to be chosen depending		

Weidmüller Interface GmbH & Co. KG
Klingenbergstraße 26
D-32758 Detmold
Germany

www.weidmueller.com

Technical data

	on the product and the rated voltage., The outside diameter of the plastic collar should not be larger than the pitch (P)

Rated data acc. to IEC

tested acc. to standard	IEC 60664-1	Rated current, min. number of poles (Tu=20°C)	232 A
Rated current, max. number of poles (Tu=20°C)	232 A	Rated voltage for surge voltage class / pollution degree III/3	1000 V
Rated impulse voltage for surge voltage class/ contamination degree III/3	8 kV		

Rated data acc. to CSA

Institute (CSA)	CSA	Certificate No. (CSA)	200039-1830694
Rated voltage (Use group B / CSA)	600 V	Rated voltage (Use group C / CSA)	600 V
Rated voltage (Use group D / CSA)	300 V	Rated current (Use group B / CSA)	230 A
Rated current (Use group C / CSA)	230 A	Rated current (Use group D / CSA)	10 A
Wire cross-section, AWG, min.	AWG 4	Wire cross-section, AWG, max.	AWG 4/0
Reference to approval values	Specifications are maximum values, details - see approval certificate.		

Rated data acc. to UL 1059

Institute (cURus)	CURUS	Certificate No. (cURus)	E60693
Rated voltage (Use group B / UL 1059)	600 V	Rated voltage (Use group C / UL 1059)	600 V
Rated voltage (Use group D / UL 1059)	300 V	Rated current (Use group B / UL 1059)	230 A
Rated current (Use group C / UL 1059)	230 A	Rated current (Use group D / UL 1059)	10 A
Wire cross-section, AWG, min.	AWG 4	Wire cross-section, AWG, max.	AWG 4/0
Reference to approval values	Specifications are maximum values, details - see approval certificate.		

Packing

Packaging	Box	VPE length	271.00 mm
VPE width	117.00 mm	VPE height	99.00 mm

Important note

Notes	• Clearance and creepage distances to other components must be devised in accordance with the relevant application standard. This can be achieved in the device by full encapsulation or by the use of additional spacer plates. • Rated data refer only to the component itself. Clearance and creepage distances to other components are to be designed in accordance with the relevant application standards. • Colours: SW = black; GN/YL = green/yellow; GY = grey • Additional variants on request • WGK: Rated voltage plastic walls: 1–6 mm = 1000 V; metal walls: < 1 mm = 1000 V; metal walls: 1–3.5 mm = 800 V; metal walls: 3.5–5.5 mm = 690 V • Long term storage of the product with average temperature of 50 °C and maximum humidity 70%, 36 months

Classifications

ETIM 6.0	EC001283	ETIM 7.0	EC001283
ETIM 8.0	EC001283	ETIM 9.0	EC001283

WGK 95F VP GY BX

Weidmüller Interface GmbH & Co. KG
Klingenbergstraße 26
D-32758 Detmold
Germany

www.weidmueller.com

Technical data

ETIM 10.0	EC001283	ECLASS 9.0	27-14-11-34
ECLASS 9.1	27-14-11-34	ECLASS 10.0	27-14-11-34
ECLASS 11.0	27-14-11-34	ECLASS 12.0	27-14-11-34
ECLASS 13.0	27-14-11-34	ECLASS 14.0	27-14-11-34
ECLASS 15.0	27-14-11-34		

WGK 95F VP GY BX

Weidmüller Interface GmbH & Co. KG
Klingenbergstraße 26
D-32758 Detmold
Germany

www.weidmueller.com

Drawings

Dimensional drawing

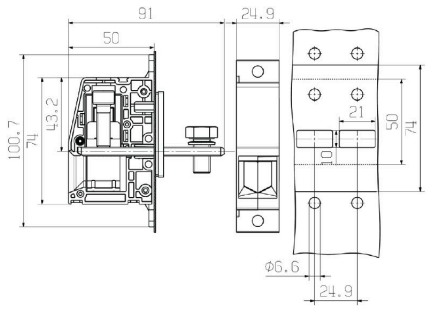
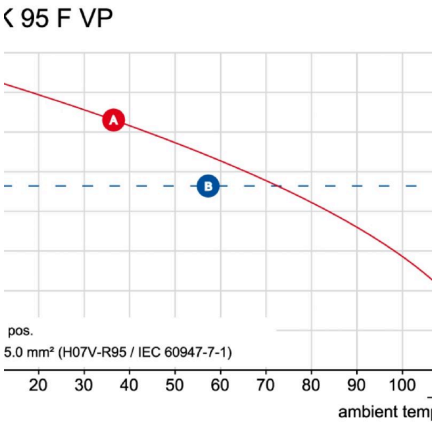
Graph