Data sheet

SVZ 7.62HP/10/180SF SN BK BX SO

Weidmüller Interface GmbH & Co. KG
Klingenbergstraße 26
D-32758 Detmold
Germany

www.weidmueller.com

Product image

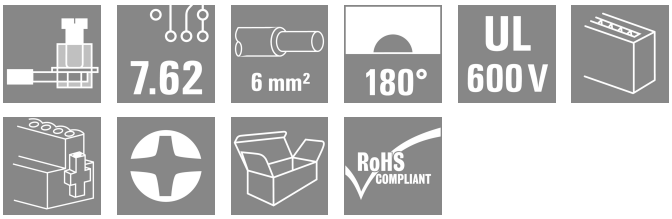

High-performance male header with the proven, 100% maintenance-free Weidmüller steel clamping yoke. Side-by-side mounting without sacrificing any poles or with patented multifunction flange for secure, fast fixing without tools. Maximum connection and operating reliability thanks to a mating profile that prevents incorrect connection, unique coding diversity, incorrect wiring protection. Suitable for labelling.

General ordering data

Version	PCB plug-in connector, male plug, 7.62 mm, Number of poles: 10, 180°, Clamping yoke connection, Clamping range, max. : 6 mm², Box
Order No.	1932040000
Type	SVZ 7.62HP/10/180SF SN BK BX SO
GTIN (EAN)	4032248582150
Qty.	50 items
Product data	IEC: 1000 V / 57 A / 0.2 - 10 mm² UL: 600 V / 42 A / AWG 24 - AWG 8
Packaging	Box

SVZ 7.62HP/10/180SF SN BK BX SO

Weidmüller Interface GmbH & Co. KG
Klingenbergstraße 26
D-32758 Detmold
Germany

www.weidmueller.com

Technical data

Approvals

Approvals	
ROHS	Conform
UL File Number Search	UL Website
Certificate No. (cURus)	E60693

Dimensions and weights

Depth	41.45 mm	Depth (inches)	1.6319 inch
Height	23.1 mm	Height (inches)	0.9094 inch
Width	91.44 mm	Width (inches)	3.6 inch
Net weight	50.5 g		

Environmental Product Compliance

RoHS Compliance Status	Compliant without exemption
REACH SVHC	No SVHC above 0.1 wt%

System Parameters

Product family	OMNIMATE Power - series BV/SV 7.62HP	Type of connection	Field connection
Wire connection method	Clamping yoke connection	Pitch in mm (P)	7.62 mm
Pitch in inches (P)	0.300 "	Conductor outlet direction	180°
Number of poles	10	L1 in mm	68.58 mm
L1 in inches	2.700 "	Number of rows	1
Pin series quantity	1	Rated cross-section	6 mm²
Touch-safe protection acc. to DIN VDE 57 106	Safe from finger touch	Touch-safe protection acc. to DIN VDE 0470	IP20 plugged
Protection degree	IP20	Volume resistance	4.50 mΩ
Can be coded	Yes	Stripping length	12 mm
Tightening torque for screw flange, min.	0.2 Nm	Tightening torque for screw flange, max.	0.3 Nm
Tightening torque, min.	0.5 Nm	Tightening torque, max.	0.6 Nm
Clamping screw	M 3	Screwdriver blade	0.6 x 3.5
Plugging cycles	25		

Material data

Insulating material	PA GF	Colour	black
Colour chart (similar)	RAL 9011	Insulating material group	II
Comparative Tracking Index (CTI)	≥ 500	Insulation resistance	≥ 108 Ω
Moisture Level (MSL)		UL 94 flammability rating	V-0
Contact base material	Cu-alloy	Contact material	Cu-alloy
Contact surface	tinned	Layer structure of plug contact	4...6 µm Sn glossy
Storage temperature, min.	-40 °C	Storage temperature, max.	70 °C
Operating temperature, min.	-50 °C	Operating temperature, max.	125 °C
Temperature range, installation, min.	-25 °C	Temperature range, installation, max.	125 °C

Conductors suitable for connection

Clamping range, min.	0.2 mm²
Clamping range, max.	6 mm²

SVZ 7.62HP/10/180SF SN BK BX SO

Weidmüller Interface GmbH & Co. KG
Klingenbergstraße 26
D-32758 Detmold
Germany

www.weidmueller.com

Technical data

Wire connection cross section AWG, min.	AWG 22			
Wire connection cross section AWG, max.	AWG 8			
Solid, min. H05(07) V-U	0.2 mm²			
Solid, max. H05(07) V-U	6 mm²			
Flexible, min. H05(07) V-K	0.5 mm²			
Flexible, max. H05(07) V-K	10 mm²			
w. plastic collar ferrule, DIN 46228 pt 4, min.	0.25 mm²			
w. plastic collar ferrule, DIN 46228 pt 4, max.	6 mm²			
w. wire end ferrule, DIN 46228 pt 1, min.	0.25 mm²			
w. wire end ferrule, DIN 46228 pt 1, max.	6 mm²			
Plug gauge in accordance with EN 60999 a x b; ø	2.8 mm x 2.0 mm; 2.4 mm			
Clampable conductor	Cross-section for conductor connection	Type	fine-wired	
		nominal	0.5 mm²	
	wire end ferrule	Stripping length	nominal	14 mm
		Recommended wire-end ferrule	H0,5/18 OR	
	Cross-section for conductor connection	Type	fine-wired	
		nominal	1 mm²	
	wire end ferrule	Stripping length	nominal	15 mm
		Recommended wire-end ferrule	H1,0/18 GE	
	Cross-section for conductor connection	Type	fine-wired	
		nominal	1.5 mm²	
	wire end ferrule	Stripping length	nominal	15 mm
		Recommended wire-end ferrule	H1,5/18D SW	
		Stripping length	nominal	12 mm
		Recommended wire-end ferrule	H1,5/12	
	Cross-section for conductor connection	Type	fine-wired	
		nominal	0.75 mm²	
	wire end ferrule	Stripping length	nominal	14 mm
		Recommended wire-end ferrule	H0,75/18 W	
	Cross-section for conductor connection	Type	fine-wired	
		nominal	2.5 mm²	
	wire end ferrule	Stripping length	nominal	14 mm
		Recommended wire-end ferrule	H2,5/19D BL	
		Stripping length	nominal	12 mm
		Recommended wire-end ferrule	H2,5/12	
	Cross-section for conductor connection	Type	fine-wired	
		nominal	4 mm²	
	wire end ferrule	Stripping length	nominal	12 mm
		Recommended wire-end ferrule	H4,0/12	
		Stripping length	nominal	14 mm
		Recommended wire-end ferrule	H4,0/20D GR	
	Cross-section for conductor connection	Type	fine-wired	
		nominal	6 mm²	
	wire end ferrule	Stripping length	nominal	14 mm

SVZ 7.62HP/10/180SF SN BK BX SO

Weidmüller Interface GmbH & Co. KG
Klingenbergstraße 26
D-32758 Detmold
Germany

www.weidmueller.com

Technical data

		Recommended wire-end ferrule	H6,0/20 SW
		Stripping length	nominal 12 mm
		Recommended wire-end ferrule	H6,0/12
Reference text	The outside diameter of the plastic collar should not be larger than the pitch (P), Length of ferrules is to be chosen depending on the product and the rated voltage.		

Rated data acc. to IEC

tested acc. to standard	IEC 60664-1, IEC 61984	Rated current, min. number of poles (Tu=20°C)	57 A
Rated current, max. number of poles (Tu=20°C)	41 A	Rated current, min. number of poles (Tu=40°C)	41 A
Rated current, max. number of poles (Tu=40°C)	41 A	Rated voltage for surge voltage class / pollution degree II/2	1000 V
Rated voltage for surge voltage class / pollution degree III/2	1000 V	Rated voltage for surge voltage class / pollution degree III/3	800 V
Rated impulse voltage for surge voltage class/ pollution degree II/2	6 kV	Rated impulse voltage for surge voltage class/ pollution degree III/2	8 kV
Rated impulse voltage for surge voltage class/ contamination degree III/3	8 kV	Short-time withstand current resistance	3 x 1s with 420 A
Creepage distance, min.	13.8 mm	Clearance, min.	13.56 mm

Rated data acc. to CSA

Institute (CSA)	CSA	Certificate No. (CSA)	200039-1534443
Rated voltage (Use group B / CSA)	600 V	Rated voltage (Use group C / CSA)	600 V
Rated voltage (Use group D / CSA)	600 V	Rated current (Use group B / CSA)	35 A
Rated current (Use group C / CSA)	35 A	Rated current (Use group D / CSA)	5 A
Wire cross-section, AWG, min.	AWG 24	Wire cross-section, AWG, max.	AWG 10
Reference to approval values	Specifications are maximum values, details - see approval certificate.		

Rated data acc. to UL 1059

Institute (cURus)	CURUS	Certificate No. (cURus)	E60693
Rated voltage (Use group B / UL 1059)	600 V	Rated voltage (Use group C / UL 1059)	600 V
Rated voltage (Use group D / UL 1059)	600 V	Rated current (Use group B / UL 1059)	42 A
Rated current (Use group C / UL 1059)	42 A	Rated current (Use group D / UL 1059)	5 A
Wire cross-section, AWG, min.	AWG 24	Wire cross-section, AWG, max.	AWG 8
Reference to approval values	Specifications are maximum values, details - see approval certificate.		

Packing

Packaging	Box	VPE length	365.00 mm
VPE width	120.00 mm	VPE height	122.00 mm

Type tests

Test: Durability of markings	Standard	DIN EN 61984 section 7.3.2 / 09.02 taking pattern from DIN EN 60068-2-70 / 07.96
	Test	mark of origin, type identification, pitch, type of material
	Evaluation	available
	Test	durability
	Evaluation	passed

SVZ 7.62HP/10/180SF SN BK BX SO

Weidmüller Interface GmbH & Co. KG
Klingenbergstraße 26
D-32758 Detmold
Germany

www.weidmueller.com

Technical data

Test: Misengagement (Non-interchangeability)	Standard	DIN EN 61984 section 6.3 and 6.9.1 / 09.02, DIN EN 60512-13-5 / 11.08	
	Test	180° turned with coding elements	
	Evaluation	passed	
	Test	180° turned without coding elements	
	Evaluation	passed	
Test: Clampable cross section	Standard	DIN EN 60999-1 section 7 and 9.1 / 12.00, DIN EN 60947-1 section 8.2.4.5.1 / 12.02	
	Conductor type	Type of conductor and conductor cross-section	solid 0.5 mm²
		Type of conductor and conductor cross-section	stranded 0.5 mm²
		Type of conductor and conductor cross-section	solid 6 mm²
		Type of conductor and conductor cross-section	stranded 6 mm²
		Type of conductor and conductor cross-section	AWG 24/1
		Type of conductor and conductor cross-section	AWG 24/19
		Type of conductor and conductor cross-section	AWG 10/1
		Type of conductor and conductor cross-section	AWG 10/19
	Evaluation	passed	
Test for damage to and accidental loosening of conductors	Standard	DIN EN 60999-1 section 7 and 9.1 / 12.00	
	Requirement	0.2 kg	
	Conductor type	Type of conductor and conductor cross-section	AWG 24/1
		Type of conductor and conductor cross-section	AWG 24/19
	Evaluation	passed	
	Requirement	0.3 kg	
	Conductor type	Type of conductor and conductor cross-section	solid 0.5 mm²
		Type of conductor and conductor cross-section	stranded 0.5 mm²
	Evaluation	passed	
	Requirement	1.4 kg	
	Conductor type	Type of conductor and conductor cross-section	solid 6 mm²
		Type of conductor and conductor cross-section	stranded 6 mm²
		Type of conductor and conductor cross-section	AWG 10/1
		Type of conductor and conductor cross-section	AWG 10/19

SVZ 7.62HP/10/180SF SN BK BX SO

Weidmüller Interface GmbH & Co. KG
Klingenbergstraße 26
D-32758 Detmold
Germany

www.weidmueller.com

Technical data

	Evaluation	passed	
Pull-out test	Standard	DIN EN 60999-1 section 9.5 / 12.00	
	Requirement	≥10 N	
	Conductor type	Type of conductor and conductor cross-section	AWG 24/1
		Type of conductor and conductor cross-section	AWG 24/19
	Evaluation	passed	
	Requirement	≥20 N	
	Conductor type	Type of conductor and conductor cross-section	solid 0.5 mm²
		Type of conductor and conductor cross-section	stranded 0.5 mm²
	Evaluation	passed	
	Requirement	≥80 N	
	Conductor type	Type of conductor and conductor cross-section	solid 6 mm²
		Type of conductor and conductor cross-section	stranded 6 mm²
		Type of conductor and conductor cross-section	AWG 10/1
		Type of conductor and conductor cross-section	AWG 10/19
	Evaluation	passed	

Important note

IPC conformity	Conformity: The products are developed, manufactured and delivered according international recognized standards and norms and comply with the assured properties in the data sheet resp. fulfill decorative properties in accordance with IPC-A-610 "Class 2". Further claims on the products can be evaluated on request.
Notes	• Additional variants on request • Rated current related to rated cross-section & min. No. of poles. • Wire end ferrule without plastic collar to DIN 46228/1 • Wire end ferrule with plastic collar to DIN 46228/4 • The data given under CSA relates to a cUL approval - E60693 • P on drawing = pitch • Rated data refer only to the component itself. Clearance and creepage distances to other components are to be designed in accordance with the relevant application standards. • In accordance with IEC 61984, OMNIMATE-connectors are connectors without breaking capacity (COC). During designated use, connectors are not allowed to be engaged or disengaged when live or under load • Long term storage of the product with average temperature of 50 °C and maximum humidity 70%, 36 months

Classifications

ETIM 8.0	EC002638	ETIM 9.0	EC002638
ETIM 10.0	EC002638	ECLASS 14.0	27-46-02-02
ECLASS 15.0	27-46-02-02		

SVZ 7.62HP/10/180SF SN BK BX SO

Weidmüller Interface GmbH & Co. KG
Klingenbergstraße 26
D-32758 Detmold
Germany

www.weidmueller.com

Drawings

Product image

Dimensional drawing

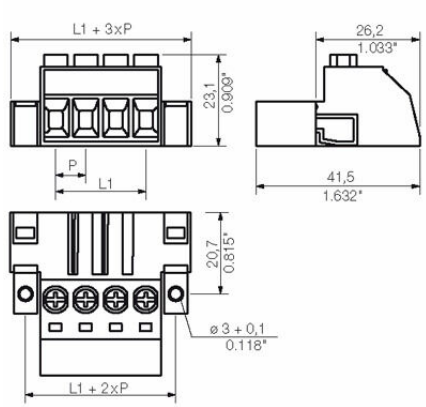

Dimensional drawing

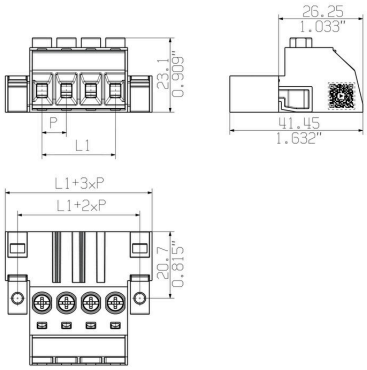

Graph

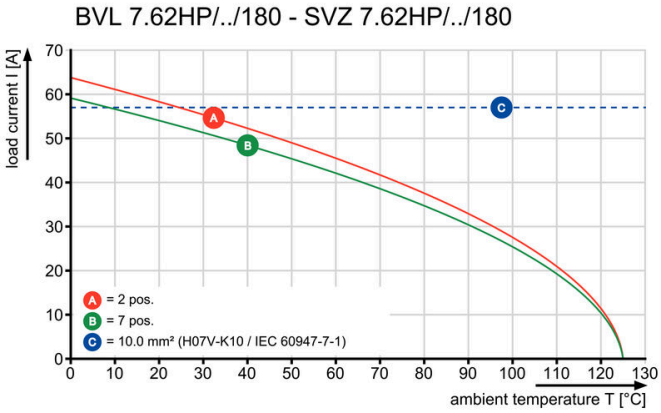

Graph

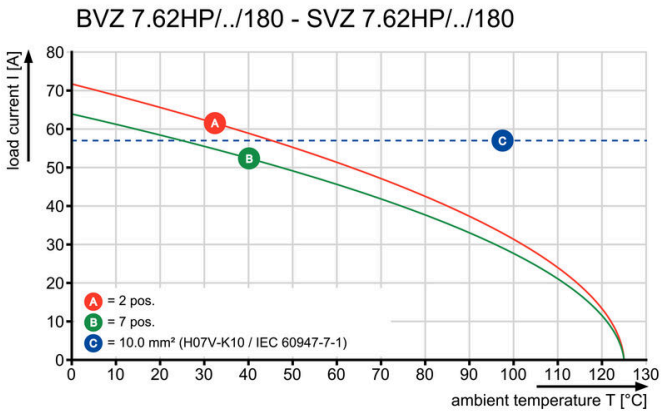

SVZ 7.62HP/10/180SF SN BK BX SO

Weidmüller Interface GmbH & Co. KG
Klingenbergstraße 26
D-32758 Detmold
Germany

www.weidmueller.com

Accessories

Coding elements

The pluggable connections for power electronics - optimised for modern drive technologies, e.g. motor starters, frequency converters and servo-controllers. OMNIMATE Power sets the new standard – with increased safety and innovative solutions such as the pluggable shield, integrated signal contacts and one-handed operation.
The three product lines offer you further advantages:
- Application-oriented scalability: from the compact 4 mm² connector for 29 A (IEC) or 20 A (UL) up to the sturdy 16 mm² connector for 76 A (IEC) or 54 A (UL)
- Unlimited usage up to 1,000 V (IEC) or 600 V (UL)
- A variety of application optimised mounting options

Our service:
Design your individual connectors simply by using the product configurator.

General ordering data

Type	BV/SV 7.62HP KO	Version
Order No.	1937590000	PCB plug-in connector, Accessories, Coding element, black, Number
GTIN (EAN)	4032248608881	of poles: 1
Qty.	50 ST	

Strain reliefs

For frequent load changes: the "trailer coupling" for plug-in connectors.
The strain relief can do more than just relieve the strain on conductors:
Simply clip onto the plug and
- bundle conductors
- guide cables
- use as a connection and disconnection aid

No damage to the connecting points, clear, tidy wiring and easy to handle.
User advantages: permanent heavy-duty connections for harsh industrial environments and convenient operation ensure improved system availability.

General ordering data

Type	BV/SV 7.62HP/02 ZE GR	Version
Order No.	1937550000	PCB plug-in connector, Accessories, Strain relief, Light Grey, Number
GTIN (EAN)	4032248608836	of poles: 2
Qty.	50 ST	
Type	BV/SV 7.62HP/04 ZE GR	Version
Order No.	1937560000	PCB plug-in connector, Accessories, Strain relief, Light Grey, Number
GTIN (EAN)	4032248608843	of poles: 4
Qty.	50 ST	