Data sheet

HDC 32A SDBO 1M32G

Weidmüller Interface GmbH & Co. KG
Klingenbergstraße 26
D-32758 Detmold
Germany

www.weidmueller.com

The special die-cast alloy and the multi-layered surface sealing provide complete protection for the HDC housings.
The cleverly designed interlock system is manufactured from stainless steel. This guarantees a long lifespan with high resistance to corrosion and impact.
The housing interlock system provides integrated safety. Our unique, patented spring system provides the housing interlock with a secure grip and prevents accidental opening.
The laser marking allows for easy and quick identification. Each housing is permanently labelled with a laser marking so that each product can be quickly designated and positioned.
Weidmüller RockStar® IP 65 / NEMA Type 4X housings - your first choice for industrial housings with IP 65 protection.

General ordering data

Version	HDC enclosures, Installation size: 7, Protection degree: IP65, in plugged condition, Base housing, Side-locking clamp on upper side, Standard, with cover, Size of cable entries: M 32
Order No.	1903910000
Type	HDC 32A SDBO 1M32G
GTIN (EAN)	4032248586134
Qty.	1 items

HDC 32A SDBO 1M32G

Weidmüller Interface GmbH & Co. KG
Klingenbergstraße 26
D-32758 Detmold
Germany

www.weidmueller.com

Technical data

Approvals

Approvals	
ROHS	Conform
UL File Number Search	UL Website
Certificate No. (cURus)	E92202

Dimensions and weights

Height	97 mm	Height (inches)	3.8189 inch
Width	89.2 mm	Width (inches)	3.5118 inch
Mounting dimension - height	46 mm	Mounting dimension - width	92 mm
Net weight	412.72 g		

Temperatures

Limit temperature	-40 °C ... 125 °C

Environmental Product Compliance

RoHS Compliance Status	Compliant without exemption	
REACH SVHC	No SVHC above 0.1 wt%	
Chemical resistance	Substance	Acetone
	Chemical resistance	Conditionally resistant
	Substance	Drilling oil
	Chemical resistance	Resistant
	Substance	Diesel
	Chemical resistance	Resistant
	Substance	Ethyl alcohol
	Chemical resistance	Resistant
	Substance	Transmission oil
	Chemical resistance	Resistant
	Substance	Hydraulic oil
	Chemical resistance	Resistant
	Substance	Coolant
	Chemical resistance	Resistant
	Substance	Petroleum benzine
	Chemical resistance	Resistant
	Substance	Sweat
	Chemical resistance	Resistant
	Substance	Premium gasoline
	Chemical resistance	Conditionally resistant
	Substance	Water
	Chemical resistance	Resistant
	Substance	UV
	Chemical resistance	Unstable
	Substance	Ozone
	Chemical resistance	Unstable

Dimensions

Hole pitch length A2	92 mm	Cable entry	w. thread
Width housing C	56 mm	Width base C1	64.5 mm

HDC 32A SDBO 1M32G

Weidmüller Interface GmbH & Co. KG
Klingenbergstraße 26
D-32758 Detmold
Germany

www.weidmueller.com

Technical data

Total length housing	82 mm	Height of housing B	75 mm
Height of base B1	5 mm		

General data

Surface finish	Powder coating	Protection degree	IP65, in plugged condition

Version

Size of cable entries	M 32	Top part/bottom part/lid	lower part
Cover	without cover	Tightening torque	1.2 Nm
Number of cable entry on top	0	Number of cable entry sideways	1
Design of cover	with cover	Design of housing	Base housing
Design of locking system	Side-locking clamp on upper side	Design	Standard
Installation size	7	Cable entry	w. thread
Type	Base housing	Clamp version	Side-locking clamp
Sealing	NBR	Internal thread	M 32
Colour (RAL)	RAL 7035	BG	7
Suitable for ModuPlug®	No		

Classifications

ETIM 8.0	EC000437	ETIM 9.0	EC000437
ETIM 10.0	EC000437	ECLASS 14.0	27-44-02-02
ECLASS 15.0	27-44-02-02		

HDC 32A SDBO 1M32G

Weidmüller Interface GmbH & Co. KG
Klingenbergstraße 26
D-32758 Detmold
Germany

www.weidmueller.com

Drawings

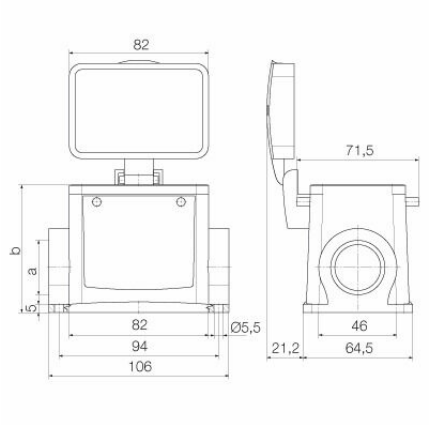

HDC 32A SDBO 1M32G

Weidmüller Interface GmbH & Co. KG
Klingenbergstraße 26
D-32758 Detmold
Germany

www.weidmueller.com

Accessories

Hood, Cable Entry at top

The special die-cast alloy and the multi-layered surface sealing provide complete protection for the HDC housings.
The cleverly designed interlock system is manufactured from stainless steel. This guarantees a long lifespan with high resistance to corrosion and impact.
The housing interlock system provides integrated safety. Our unique, patented spring system provides the housing interlock with a secure grip and prevents accidental opening.
The laser marking allows for easy and quick identification. Each housing is permanently labelled with a laser marking so that each product can be quickly designated and positioned.
Weidmüller RockStar® IP 65 / NEMA Type 4X housings - your first choice for industrial housings with IP 65 protection.

General ordering data

Type	HDC 32A TOBU 1PG21G	Version
Order No.	1665790000	HDC enclosures, Installation size: 7, Protection degree: IP65, in
GTIN (EAN)	4008190422813	plugged condition, Cable entry from top, Plug housing, Side-locking
Qty.	1 ST	clamp on lower side, Standard, Size of cable entries: PG 21
Type	HDC 32A TOBU 1PG29G	Version
Order No.	1665810000	HDC enclosures, Installation size: 7, Protection degree: IP65, in
GTIN (EAN)	4008190422837	plugged condition, Cable entry from top, Plug housing, Side-locking
Qty.	1 ST	clamp on lower side, Standard, Size of cable entries: PG 29
Type	HDC 32A TOBU 1M32G	Version
Order No.	1787990000	HDC enclosures, Installation size: 7, Protection degree: IP65, in
GTIN (EAN)	4032248205431	plugged condition, Cable entry from top, Plug housing, Side-locking
Qty.	1 ST	clamp on lower side, Standard, Size of cable entries: M 32

Hood, Cable Entry sideways

The special die-cast alloy and the multi-layered surface sealing provide complete protection for the HDC housings.
The cleverly designed interlock system is manufactured from stainless steel. This guarantees a long lifespan with high resistance to corrosion and impact.
The housing interlock system provides integrated safety. Our unique, patented spring system provides the housing interlock with a secure grip and prevents accidental opening.
The laser marking allows for easy and quick identification. Each housing is permanently labelled with a laser marking so that each product can be quickly designated and positioned.
Weidmüller RockStar® IP 65 / NEMA Type 4X housings - your first choice for industrial housings with IP 65 protection.

HDC 32A SDBO 1M32G

Weidmüller Interface GmbH & Co. KG
Klingenbergstraße 26
D-32758 Detmold
Germany

www.weidmueller.com

Accessories

General ordering data

Type	HDC 32A TSBU 1PG21G	Version
Order No.	1665670000	HDC enclosures, Installation size: 7, Protection degree: IP65, in
GTIN (EAN)	4008190422691	plugged condition, Cable entry from side, Plug housing, Side-locking
Qty.	1 ST	clamp on lower side, Standard, Size of cable entries: PG 21
Type	HDC 32A TSBU 1PG29G	Version
Order No.	1665690000	HDC enclosures, Installation size: 7, Protection degree: IP65, in
GTIN (EAN)	4008190422714	plugged condition, Cable entry from side, Plug housing, Side-locking
Qty.	1 ST	clamp on lower side, Standard, Size of cable entries: PG 29
Type	HDC 32A TSBU 1M32G	Version
Order No.	1787950000	HDC enclosures, Installation size: 7, Protection degree: IP65, in
GTIN (EAN)	4032248205394	plugged condition, Cable entry from side, Plug housing, Side-locking
Qty.	1 ST	clamp on lower side, Standard, Size of cable entries: M 32
Type	HDC 32A TSBU 1M25G	Version
Order No.	1787960000	HDC enclosures, Installation size: 7, Protection degree: IP65, in
GTIN (EAN)	4032248205400	plugged condition, Cable entry from side, Plug housing, Side-locking
Qty.	1 ST	clamp on lower side, Standard, Size of cable entries: M 25

Cover

The special die-cast alloy and the multi-layered surface sealing provide complete protection for the HDC housings.
The cleverly designed interlock system is manufactured from stainless steel. This guarantees a long lifespan with high resistance to corrosion and impact.
The housing interlock system provides integrated safety. Our unique, patented spring system provides the housing interlock with a secure grip and prevents accidental opening.
The laser marking allows for easy and quick identification. Each housing is permanently labelled with a laser marking so that each product can be quickly designated and positioned.
Weidmüller RockStar® IP 65 / NEMA Type 4X housings - your first choice for industrial housings with IP 65 protection.

General ordering data

Type	HDC 32A DODQ 4BO	Version
Order No.	1665920000	HDC enclosures, Installation size: 7, Protection degree: IP65, in
GTIN (EAN)	4008190422950	plugged condition, Cover for lower part of housing, Side-locking
Qty.	1 ST	clamp on lower side, Standard, Size of cable entries: none