Data sheet

HDC 10A SDLU 1M20G

Weidmüller Interface GmbH & Co. KG
Klingenbergstraße 26
D-32758 Detmold
Germany

www.weidmueller.com

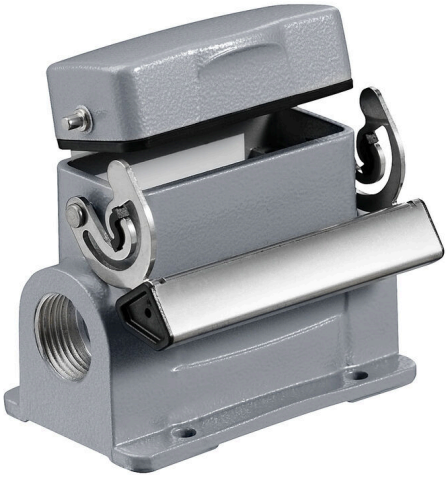

The special die-cast alloy and the multi-layered surface sealing provide complete protection for the HDC housings.
The cleverly designed interlock system is manufactured from stainless steel. This guarantees a long lifespan with high resistance to corrosion and impact.
The housing interlock system provides integrated safety. Our unique, patented spring system provides the housing interlock with a secure grip and prevents accidental opening.
The laser marking allows for easy and quick identification. Each housing is permanently labelled with a laser marking so that each product can be quickly designated and positioned.
Weidmüller RockStar® IP 65 / NEMA Type 4X housings - your first choice for industrial housings with IP 65 protection.

General ordering data

Version	HDC enclosures, Installation size: 2, Protection degree: IP65, in plugged condition, Base housing, End-locking clamp, lower side, Standard, with cover, Size of cable entries: M 20
Order No.	1901010000
Type	HDC 10A SDLU 1M20G
GTIN (EAN)	4032248586158
Qty.	1 items

HDC 10A SDLU 1M20G

Weidmüller Interface GmbH & Co. KG
Klingenbergstraße 26
D-32758 Detmold
Germany

www.weidmueller.com

Technical data

Approvals

Approvals	
ROHS	Conform
UL File Number Search	UL Website
Certificate No. (cURus)	E92202

Dimensions and weights

Height	70 mm	Height (inches)	2.7559 inch
Width	76 mm	Width (inches)	2.9921 inch
Mounting dimension - height	40 mm	Mounting dimension - width	48 mm
Net weight	256 g		

Temperatures

Limit temperature	-40 °C ... 125 °C

Environmental Product Compliance

RoHS Compliance Status	Compliant without exemption	
REACH SVHC	Potassium perfluorobutane sulfonate 29420-49-3	
SCIP	e98b2b24-ba23-41bf-8d19-0dda3647412f	
Chemical resistance	Substance	Acetone
	Chemical resistance	Conditionally resistant
	Substance	Drilling oil
	Chemical resistance	Resistant
	Substance	Diesel
	Chemical resistance	Resistant
	Substance	Ethyl alcohol
	Chemical resistance	Resistant
	Substance	Transmission oil
	Chemical resistance	Resistant
	Substance	Hydraulic oil
	Chemical resistance	Resistant
	Substance	Coolant
	Chemical resistance	Resistant
	Substance	Petroleum benzine
	Chemical resistance	Resistant
	Substance	Sweat
	Chemical resistance	Resistant
	Substance	Premium gasoline
	Chemical resistance	Conditionally resistant
	Substance	Water
	Chemical resistance	Resistant
	Substance	UV
	Chemical resistance	Unstable
	Substance	Ozone
	Chemical resistance	Unstable

Dimensions

Hole pitch length A2	48 mm	Cable entry	w. thread
Width housing C	30 mm	Width base C1	50 mm

HDC 10A SDLU 1M20G

Weidmüller Interface GmbH & Co. KG
Klingenbergstraße 26
D-32758 Detmold
Germany

www.weidmueller.com

Technical data

Total length housing	63 mm	Height of housing B	70 mm
Height of base B1	4 mm		

General data

Tightening torque	0.5 Nm	Housing main material	diecast aluminium
Surface finish	Powder coating	Protection degree	IP65, in plugged condition
Protection class note	Protection class with secured cover: IP 65	EMC housings	No
Material of locking element	Stainless steel, rust-proof		

Version

Size of cable entries	M 20	Top part/bottom part/lid	lower part
Cover	with cover	Tightening torque	0.5 Nm
Number of cable entry on top	0	Number of cable entry sideways	1
Design of cover	with cover	Design of housing	Base housing
Design of locking system	End-locking clamp, lower side	Design	Standard
Installation size	2	Cable entry	w. thread
Type	Base housing	Clamp version	End-locking clamp
Sealing	NBR	Internal thread	M 20
Colour (RAL)	RAL 7035	BG	2
Suitable for ModuPlug®	No		

Classifications

ETIM 8.0	EC000437	ETIM 9.0	EC000437
ETIM 10.0	EC000437	ECLASS 14.0	27-44-02-02
ECLASS 15.0	27-44-02-02		

HDC 10A SDLU 1M20G

Weidmüller Interface GmbH & Co. KG
Klingenbergstraße 26
D-32758 Detmold
Germany

www.weidmueller.com
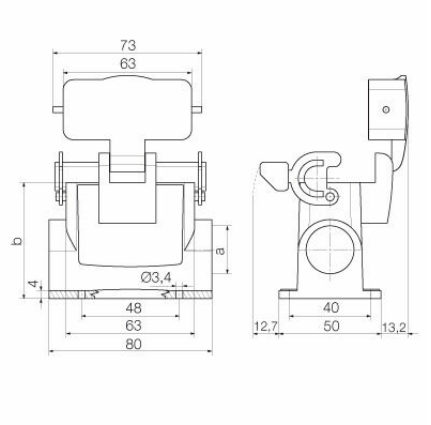
Drawings