Data sheet

SL-SMT 3.50/02/180LF 3.2SN BK BX

Weidmüller Interface GmbH & Co. KG
Klingenbergstraße 26
D-32758 Detmold
Germany

www.weidmueller.com

Product image

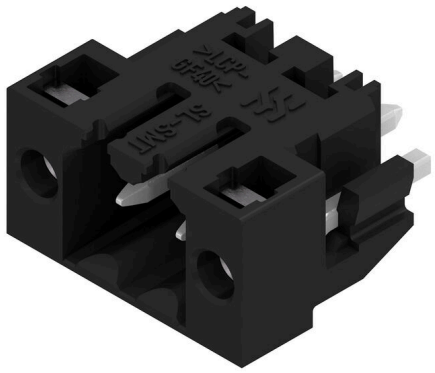

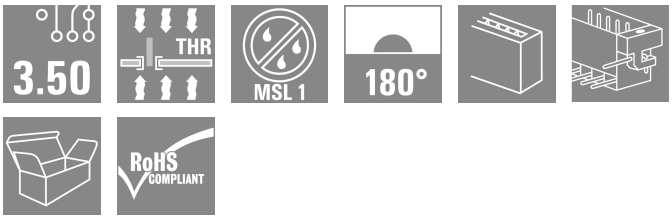

High-temperature-resistant male header, 3.50 mm pitch.

- Plugging direction parallel (90°), straight 180° or angled (135°) to PCB
- Housing variants: closed side (G), screw flange (F), solder flange (LF) or snap-on solder flange (RF)
- Optimised for the SMT process
- Pin length 3.2 mm universal for all soldering methods
- Pin length 1.5 mm optimised for reflow soldering methods
- Packed either in a box (BX) or tape-on-reel (RL)
- Male header can be coded

General ordering data

Version	PCB plug-in connector, male header, Solder flange, THT/THR solder connection, 3.50 mm, Number of poles: 2, 180°, Solder pin length (l): 3.2 mm, tinned, black, Box
Order No.	1842540000
Type	SL-SMT 3.50/02/180LF 3.2SN BK BX
GTIN (EAN)	4032248353903
Qty.	132 items
Product data	IEC: 320 V / 15 A UL: 300 V / 10 A
Packaging	Box

SL-SMT 3.50/02/180LF 3.2SN BK BX

Weidmüller Interface GmbH & Co. KG
Klingenbergstraße 26
D-32758 Detmold
Germany

www.weidmueller.com

Technical data

Approvals

Approvals	
ROHS	Conform
UL File Number Search	UL Website
Certificate No. (UR)	E60693

Dimensions and weights

Depth	7.5 mm	Depth (inches)	0.2953 inch
Height	14.3 mm	Height (inches)	0.563 inch
Height of lowest version	11.1 mm	Width	14 mm
Width (inches)	0.5512 inch	Net weight	1.17 g

Environmental Product Compliance

RoHS Compliance Status	Compliant without exemption	
REACH SVHC	No SVHC above 0.1 wt%	
Product Carbon Footprint	Cradle to gate	0,017 kg CO2 eq.

System specifications

Product family	OMNIMATE Signal - series BL/SL 3.50	Type of connection	Board connection
Mounting onto the PCB	THT/THR solder connection	Pitch in mm (P)	3.50 mm
Pitch in inches (P)	0.138 "	Outgoing elbow	180°
Number of poles	2	Number of solder pins per pole	1
Solder pin length (l)	3.2 mm	Solder pin length tolerance	0 / -0.3 mm
Solder pin dimensions	d = 1.2 mm, Octagonal	Solder pin dimensions = d tolerance	0 / -0,03 mm
Solder eyelet hole diameter (D)	1.4 mm	Solder eyelet hole diameter tolerance (D)	+ 0,1 mm
Outside diameter of solder pad	2.3 mm	Template aperture diameter	2.1 mm
L1 in mm	3.50 mm	L1 in inches	0.138 "
Number of rows	1	Pin series quantity	1
Touch-safe protection acc. to DIN VDE 57 106	finger-safe plugged/ back-of-hand-safe unplugged	Touch-safe protection acc. to DIN VDE 0470	IP20 plugged/ IP10 unplugged
Protection degree	IP10	Volume resistance	≤5 mΩ
Can be coded	Yes	Plugging cycles	25
Plugging force/pole, max.	6 N	Pulling force/pole, max.	6 N

Material data

Insulating material	LCP GF	Colour	black
Colour chart (similar)	RAL 9011	Insulating material group	IIIa
Comparative Tracking Index (CTI)	≥ 175	Moisture Level (MSL)	1
UL 94 flammability rating	V-0	Contact material	Cu-alloy
Contact surface	tinned	Layer structure of solder connection	2...3 µm Ni / 5...7 µm Sn
Layer structure of plug contact	2...3 µm Ni / 5...7 µm Sn	Storage temperature, min.	-40 °C
Storage temperature, max.	70 °C	Operating temperature, min.	-50 °C
Operating temperature, max.	100 °C	Temperature range, installation, min.	-30 °C
Temperature range, installation, max.	100 °C		

SL-SMT 3.50/02/180LF 3.2SN BK BX

Weidmüller Interface GmbH & Co. KG
Klingenbergstraße 26
D-32758 Detmold
Germany

www.weidmueller.com

Technical data

Rated data acc. to IEC

tested acc. to standard	IEC 60664-1, IEC 61984	Rated current, min. number of poles (Tu=20°C)	15 A
Rated current, max. number of poles (Tu=20°C)	12 A	Rated current, min. number of poles (Tu=40°C)	13 A
Rated current, max. number of poles (Tu=40°C)	10 A	Rated voltage for surge voltage class / pollution degree II/2	320 V
Rated voltage for surge voltage class / pollution degree III/2	160 V	Rated voltage for surge voltage class / pollution degree III/3	160 V
Rated impulse voltage for surge voltage class/ pollution degree II/2	2.5 kV	Rated impulse voltage for surge voltage class/ pollution degree III/2	2.5 kV
Rated impulse voltage for surge voltage class/ contamination degree III/3	2.5 kV	Short-time withstand current resistance	3 x 1s with 100 A

Rated data acc. to CSA

Institute (CSA)	CSA	Certificate No. (CSA)	200039-1176845
Rated voltage (Use group B / CSA)	300 V	Rated voltage (Use group D / CSA)	300 V
Rated current (Use group B / CSA)	10 A	Rated current (Use group D / CSA)	10 A
Reference to approval values	Specifications are maximum values, details - see approval certificate.		

Rated data acc. to UL 1059

Institute (UR)	UR	Certificate No. (UR)	E60693
Rated voltage (Use group B / UL 1059)	300 V	Rated voltage (Use group D / UL 1059)	300 V
Rated current (Use group B / UL 1059)	10 A	Rated current (Use group D / UL 1059)	10 A
Reference to approval values	Specifications are maximum values, details - see approval certificate.		

Packing

Packaging	Box	VPE length	339.00 mm
VPE width	133.00 mm	VPE height	21.00 mm

Important note

IPC conformity	Conformity: The products are developed, manufactured and delivered according international recognized standards and norms and comply with the assured properties in the data sheet resp. fulfill decorative properties in accordance with IPC-A-610 "Class 2". Further claims on the products can be evaluated on request.
Notes	• Gold-plated contact surfaces on request • Rated current related to rated cross-section & min. No. of poles. • Diameter of solder eyelet D = 1.4+0.1mm • Solder eyelet diameter D = 1.5 + 0.1 mm, from 9 poles • P on drawing = pitch • Rated data refer only to the component itself. Clearance and creepage distances to other components are to be designed in accordance with the relevant application standards. • In accordance with IEC 61984, OMNIMATE-connectors are connectors without breaking capacity (COC). During designated use, connectors are not allowed to be engaged or disengaged when live or under load • Long term storage of the product with average temperature of 50 °C and maximum humidity 70%, 36 months

Classifications

ETIM 8.0	EC002637	ETIM 9.0	EC002637
ETIM 10.0	EC002637	ECLASS 14.0	27-46-02-01

SL-SMT 3.50/02/180LF 3.2SN BK BX

Weidmüller Interface GmbH & Co. KG
Klingenbergstraße 26
D-32758 Detmold
Germany

www.weidmueller.com

Technical data

ECLASS 15.0	27-46-02-01		

SL-SMT 3.50/02/180LF 3.2SN BK BX

Weidmüller Interface GmbH & Co. KG
Klingenbergstraße 26
D-32758 Detmold
Germany

www.weidmueller.com

Drawings

Product image

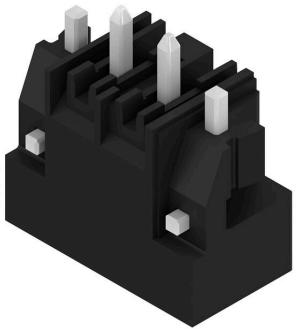

Dimensional drawing

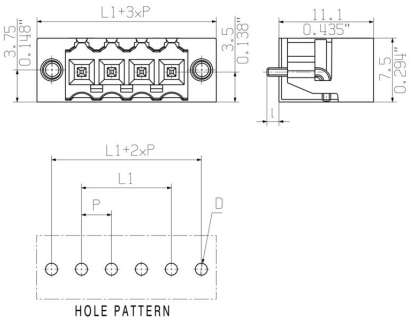

SL-SMT 3.50/02/180LF 3.2SN BK BX

Weidmüller Interface GmbH & Co. KG
Klingenbergstraße 26
D-32758 Detmold
Germany

www.weidmueller.com

Accessories

Coding elements

Only connects what is supposed to be connected: the right connection at the right place.
Coding elements and locking devices clearly assign connecting elements during the manufacturing process and operation
The coding elements and locking devices are inserted prior to assembly or during the cable assembly phase.
The Weidmüller alternative: configure online using the variant configurator to precode prior to delivery.
Incorrect assembly on the circuit board and incorrect plugging of connecting elements is no longer possible.
The advantage: no troubleshooting during manufacture and no operational errors by the user.

General ordering data

Type	BL SL 3.5 KO OR	Version
Order No.	1693430000	PCB plug-in connector, Accessories, Coding element, orange, Number
GTIN (EAN)	4008190867447	of poles: 1
Qty.	100 ST	
Type	BL SL 3.5 KO SW	Version
Order No.	1610100000	PCB plug-in connector, Accessories, Coding element, black, Number
GTIN (EAN)	4008190187637	of poles: 1
Qty.	100 ST	