Data sheet

SAI-Y-5S- M12/M12

Weidmüller Interface GmbH & Co. KG
Klingenbergstraße 26
D-32758 Detmold
Germany

www.weidmueller.com



General ordering data

Version	Y connector, M12, Signal distributor
Order No.	1826880000
Type	SAI-Y-5S- M12/M12
GTIN (EAN)	4032248330393
Qty.	1 items

Data sheet

SAI-Y-5S- M12/M12

Weidmüller Interface GmbH & Co. KG
Klingenbergstraße 26
D-32758 Detmold
Germany

www.weidmueller.com

Technical data

Approvals

Approvals	
ROHS	Conform

Dimensions and weights

Net weight	22.9 g

Environmental Product Compliance

RoHS Compliance Status	Compliant without exemption
REACH SVHC	No SVHC above 0.1 wt%

Connection data

Group outlet - plug-in connector	M12 pin	Single outlet 1 - plug-in connector	M12 socket
Single outlet 2 - plug-in connector	M12 socket	Tightening torque	M12: 0.8 - 1.2 Nm

Technical data customisable plug-in connectors

Number of poles	5	Coding	A-coded
Contact surface	Au (Gold)	Housing main material	PUR
Nominal voltage	24 V	Nominal current	4 A
Protection degree	IP67	Pollution severity	3
Shield connection	No	Threaded ring material	Diecast zinc
Temperature range of housing	-25...+90 °C		

Standards

Connector standard	IEC 61076-2-101

General data

Number of poles	5	Coding	A-coded
Connection thread	M12	Contact material, socket	CuSn
Contact material, pin	CuZn	Contact surface	Au (Gold)
Tightening torque	0.8 Nm	Housing main material	PUR
Nominal voltage	24 V	Nominal current	4 A
Protection degree	IP67	Pollution severity	3
Connection 1	M12/M12	Connection 2	Screw
Shield connection	No	Temperature range of housing	-25...+90 °C
Conductor O.D.	-		

Classifications

ETIM 8.0	EC002925	ETIM 9.0	EC002925
ETIM 10.0	EC002925	ECLASS 14.0	27-44-01-06
ECLASS 15.0	27-44-01-06		

SAI-Y-5S- M12/M12

Weidmüller Interface GmbH & Co. KG
Klingenbergstraße 26
D-32758 Detmold
Germany

www.weidmueller.com

Drawings

Dimensioned drawing

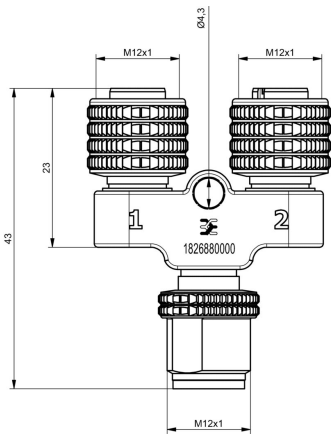

Dimensioned drawing

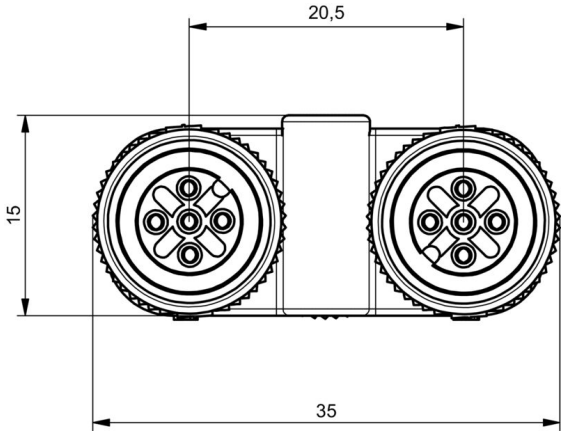

Wiring diagram

