Data sheet

HDC 48B SDLU 1PG29G

Weidmüller Interface GmbH & Co. KG
Klingenbergstraße 26
D-32758 Detmold
Germany

www.weidmueller.com

The special die-cast alloy and the multi-layered surface sealing provide complete protection for the HDC housings.
The cleverly designed interlock system is manufactured from stainless steel. This guarantees a long lifespan with high resistance to corrosion and impact.
The housing interlock system provides integrated safety. Our unique, patented spring system provides the housing interlock with a secure grip and prevents accidental opening.
The laser marking allows for easy and quick identification. Each housing is permanently labelled with a laser marking so that each product can be quickly designated and positioned.
Weidmüller RockStar® IP 65 / NEMA Type 4X housings - your first choice for industrial housings with IP 65 protection.

General ordering data

Version	HDC enclosures, Installation size: 12, Protection degree: IP65, in plugged condition, Base housing, End-locking clamp, lower side, Standard, with cover, Size of cable entries: PG 29
Order No.	1799810000
Type	HDC 48B SDLU 1PG29G
GTIN (EAN)	4032248247035
Qty.	1 items

HDC 48B SDLU 1PG29G

Weidmüller Interface GmbH & Co. KG
Klingenbergstraße 26
D-32758 Detmold
Germany

www.weidmueller.com

Technical data

Approvals

Approvals	
ROHS	Conform
UL File Number Search	UL Website
Certificate No. (cURus)	E92202

Dimensions and weights

Depth	143 mm	Depth (inches)	5.6299 inch
Height	120 mm	Height (inches)	4.7244 inch
Width	166.2 mm	Width (inches)	6.5433 inch
Mounting dimension - height	106 mm	Mounting dimension - width	111 mm
Net weight	1397.44 g		

Temperatures

Limit temperature	-40 °C ... 125 °C

Environmental Product Compliance

RoHS Compliance Status	Compliant without exemption	
REACH SVHC	No SVHC above 0.1 wt%	
Chemical resistance	Substance	Acetone
	Chemical resistance	Conditionally resistant
	Substance	Drilling oil
	Chemical resistance	Resistant
	Substance	Diesel
	Chemical resistance	Resistant
	Substance	Ethyl alcohol
	Chemical resistance	Resistant
	Substance	Transmission oil
	Chemical resistance	Resistant
	Substance	Hydraulic oil
	Chemical resistance	Resistant
	Substance	Coolant
	Chemical resistance	Resistant
	Substance	Petroleum benzine
	Chemical resistance	Resistant
	Substance	Sweat
	Chemical resistance	Resistant
	Substance	Premium gasoline
	Chemical resistance	Conditionally resistant
	Substance	Water
	Chemical resistance	Resistant
	Substance	UV
	Chemical resistance	Unstable
	Substance	Ozone
	Chemical resistance	Unstable

Dimensions

Hole pitch length A2	111 mm	Cable entry	w. thread
Width housing C	90 mm	Width base C1	120 mm

HDC 48B SDLU 1PG29G

Weidmüller Interface GmbH & Co. KG
Klingenbergstraße 26
D-32758 Detmold
Germany

www.weidmueller.com

Technical data

Total length housing	132 mm	Height of housing B	120 mm
Height of base B1	10 mm		

General data

Tightening torque	1.2 Nm	Housing main material	diecast aluminium
Surface finish	Powder coating	Protection degree	IP65, in plugged condition
Protection class note	Protection class with secured cover: IP 65	EMC housings	No
Material of locking element	Stainless steel, rust-proof		

Version

Size of cable entries	PG 29	Top part/bottom part/lid	lower part
Cover	with cover	Tightening torque	1.2 Nm
Number of cable entry on top	0	Number of cable entry sideways	1
Design of cover	with cover	Design of housing	Base housing
Design of locking system	End-locking clamp, lower side	Design	Standard
Installation size	12	Cable entry	w. thread
Type	Base housing	Clamp version	End-locking clamp
Sealing	NBR	Internal thread	PG 29
Colour (RAL)	RAL 7035	BG	12
Suitable for ModuPlug®	Yes		

Classifications

ETIM 8.0	EC000437	ETIM 9.0	EC000437
ETIM 10.0	EC000437	ECLASS 14.0	27-44-02-02
ECLASS 15.0	27-44-02-02		

HDC 48B SDLU 1PG29G

Weidmüller Interface GmbH & Co. KG
Klingenbergstraße 26
D-32758 Detmold
Germany

www.weidmueller.com

Drawings

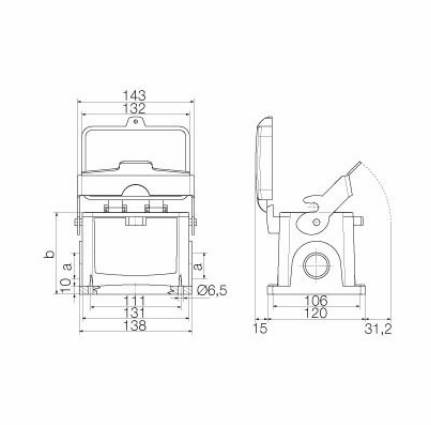

HDC 48B SDLU 1PG29G

Weidmüller Interface GmbH & Co. KG
Klingenbergstraße 26
D-32758 Detmold
Germany

www.weidmueller.com

Accessories

Hood, Cable Entry at top

The special die-cast alloy and the multi-layered surface sealing provide complete protection for the HDC housings.
The cleverly designed interlock system is manufactured from stainless steel. This guarantees a long lifespan with high resistance to corrosion and impact.
The housing interlock system provides integrated safety. Our unique, patented spring system provides the housing interlock with a secure grip and prevents accidental opening.
The laser marking allows for easy and quick identification. Each housing is permanently labelled with a laser marking so that each product can be quickly designated and positioned.
Weidmüller RockStar® IP 65 / NEMA Type 4X housings - your first choice for industrial housings with IP 65 protection.

General ordering data

Type	HDC 48B TOLU 1PG29G	Version
Order No.	1650980000	HDC enclosures, Installation size: 12, Protection degree: IP65, in
GTIN (EAN)	4008190299606	plugged condition, Cable entry from top, Plug housing, End-locking
Qty.	1 ST	clamp, lower side, Standard, Size of cable entries: PG 29
Type	HDC 48B TOLU 1PG36G	Version
Order No.	1651000000	HDC enclosures, Installation size: 12, Protection degree: IP65, in
GTIN (EAN)	4008190299620	plugged condition, Cable entry from top, Plug housing, End-locking
Qty.	1 ST	clamp, lower side, Standard, Size of cable entries: PG 36
Type	HDC 48B TOLU 1M50G	Version
Order No.	1788330000	HDC enclosures, Installation size: 12, Protection degree: IP65, in
GTIN (EAN)	4032248205868	plugged condition, Cable entry from top, Plug housing, End-locking
Qty.	1 ST	clamp, lower side, Standard, Size of cable entries: M 50
Type	HDC 48B TOLU 1M40G	Version
Order No.	1788340000	HDC enclosures, Installation size: 12, Protection degree: IP65, in
GTIN (EAN)	4032248205875	plugged condition, Cable entry from top, Plug housing, End-locking
Qty.	1 ST	clamp, lower side, Standard, Size of cable entries: M 40
Type	HDC 48B TOLU 1M32G	Version
Order No.	1788350000	HDC enclosures, Installation size: 12, Protection degree: IP65, in
GTIN (EAN)	4032248205882	plugged condition, Cable entry from top, Plug housing, End-locking
Qty.	1 ST	clamp, lower side, Standard, Size of cable entries: M 32

HDC 48B SDLU 1PG29G

Weidmüller Interface GmbH & Co. KG
Klingenbergstraße 26
D-32758 Detmold
Germany

www.weidmueller.com

Accessories

Hood, Cable Entry sideways

The special die-cast alloy and the multi-layered surface sealing provide complete protection for the HDC housings.
The cleverly designed interlock system is manufactured from stainless steel. This guarantees a long lifespan with high resistance to corrosion and impact.
The housing interlock system provides integrated safety. Our unique, patented spring system provides the housing interlock with a secure grip and prevents accidental opening.
The laser marking allows for easy and quick identification. Each housing is permanently labelled with a laser marking so that each product can be quickly designated and positioned.
Weidmüller RockStar® IP 65 / NEMA Type 4X housings - your first choice for industrial housings with IP 65 protection.

General ordering data

Type	HDC 48B TSLU 1PG29G	Version
Order No.	1650850000	HDC enclosures, Installation size: 12, Protection degree: IP65, in
GTIN (EAN)	4008190299453	plugged condition, Cable entry from side, Plug housing, End-locking
Qty.	1 ST	clamp, lower side, Standard, Size of cable entries: PG 29
Type	HDC 48B TSLU 1PG36G	Version
Order No.	1650860000	HDC enclosures, Installation size: 12, Protection degree: IP65, in
GTIN (EAN)	4008190299460	plugged condition, Cable entry from side, Plug housing, End-locking
Qty.	1 ST	clamp, lower side, Standard, Size of cable entries: PG 36
Type	HDC 48B TSLU 1PG42G	Version
Order No.	1670470000	HDC enclosures, Installation size: 12, Protection degree: IP65, in
GTIN (EAN)	4008190431556	plugged condition, Cable entry from side, Plug housing, End-locking
Qty.	1 ST	clamp, lower side, Standard, Size of cable entries: PG 42
Type	HDC 48B TSLU 1M50G	Version
Order No.	1788300000	HDC enclosures, Installation size: 12, Protection degree: IP65, in
GTIN (EAN)	4032248205837	plugged condition, Cable entry from side, Plug housing, End-locking
Qty.	1 ST	clamp, lower side, Standard, Size of cable entries: M 50
Type	HDC 48B TSLU 1M40G	Version
Order No.	1788310000	HDC enclosures, Installation size: 12, Protection degree: IP65, in
GTIN (EAN)	4032248205844	plugged condition, Cable entry from side, Plug housing, End-locking
Qty.	1 ST	clamp, lower side, Standard, Size of cable entries: M 40
Type	HDC 48B TSLU 1M32G	Version
Order No.	1788320000	HDC enclosures, Installation size: 12, Protection degree: IP65, in
GTIN (EAN)	4032248205851	plugged condition, Cable entry from side, Plug housing, End-locking
Qty.	1 ST	clamp, lower side, Standard, Size of cable entries: M 32