Data sheet

HDC 06B TOLU 1M25G

Weidmüller Interface GmbH & Co. KG
Klingenbergstraße 26
D-32758 Detmold
Germany

www.weidmueller.com

IP65

The special die-cast alloy and the multi-layered surface sealing provide complete protection for the HDC housings.
The cleverly designed interlock system is manufactured from stainless steel. This guarantees a long lifespan with high resistance to corrosion and impact.
The housing interlock system provides integrated safety. Our unique, patented spring system provides the housing interlock with a secure grip and prevents accidental opening.
The laser marking allows for easy and quick identification. Each housing is permanently labelled with a laser marking so that each product can be quickly designated and positioned.
Weidmüller RockStar® IP 65 / NEMA Type 4X housings - your first choice for industrial housings with IP 65 protection.

General ordering data

Version	HDC enclosures, Installation size: 3, Protection degree: IP65, in plugged condition, Cable entry from top, Plug housing, End-locking clamp, lower side, Standard, Size of cable entries: M 25
Order No.	1788110000
Type	HDC 06B TOLU 1M25G
GTIN (EAN)	4032248205554
Qty.	1 items

HDC 06B TOLU 1M25G

Weidmüller Interface GmbH & Co. KG
Klingenbergstraße 26
D-32758 Detmold
Germany

www.weidmueller.com

Technical data

Approvals

Approvals	
ROHS	Conform
UL File Number Search	UL Website
Certificate No. (cURus)	E92202

Dimensions and weights

Height	52 mm	Height (inches)	2.0472 inch
Width	43 mm	Width (inches)	1.6929 inch
Net weight	117 g		

Temperatures

Limit temperature	-40 °C ... 125 °C

Environmental Product Compliance

RoHS Compliance Status	Compliant without exemption	
REACH SVHC	No SVHC above 0.1 wt%	
Chemical resistance	Substance	Acetone
	Chemical resistance	Conditionally resistant
	Substance	Drilling oil
	Chemical resistance	Resistant
	Substance	Diesel
	Chemical resistance	Resistant
	Substance	Ethyl alcohol
	Chemical resistance	Resistant
	Substance	Transmission oil
	Chemical resistance	Resistant
	Substance	Hydraulic oil
	Chemical resistance	Resistant
	Substance	Coolant
	Chemical resistance	Resistant
	Substance	Petroleum benzine
	Chemical resistance	Resistant
	Substance	Sweat
	Chemical resistance	Resistant
	Substance	Premium gasoline
	Chemical resistance	Conditionally resistant
	Substance	Water
	Chemical resistance	Resistant
	Substance	UV
	Chemical resistance	Unstable
	Substance	Ozone
	Chemical resistance	Unstable

Dimensions

Cable entry	w. thread	Width housing C	43 mm
Total length housing	60 mm	Height of housing B	52 mm

HDC 06B TOLU 1M25G

Weidmüller Interface GmbH & Co. KG
Klingenbergstraße 26
D-32758 Detmold
Germany

www.weidmueller.com

Technical data

General data

Tightening torque	1.2 Nm	Housing main material	diecast aluminium
Surface finish	Powder coating	Protection degree	IP65, in plugged condition
EMC housings	No	Material of locking element	Stainless steel, rust-proof

Version

Size of cable entries	M 25	Top part/bottom part/lid	upper part
Cover	without cover	Tightening torque	1.2 Nm
Number of cable entry on top	1	Number of cable entry sideways	0
Design of housing	Cable entry from top, Plug housing	Design of locking system	End-locking clamp, lower side
Design	Standard	Installation size	3
Cable entry	w. thread	Type	Plug
Clamp version	End-locking clamp	Sealing	no sealing
Internal thread	M 25	Colour (RAL)	RAL 7035
BG	3	Suitable for ModuPlug®	No

Classifications

ETIM 8.0	EC000437	ETIM 9.0	EC000437
ETIM 10.0	EC000437	ECLASS 14.0	27-44-02-02
ECLASS 15.0	27-44-02-02		

HDC 06B TOLU 1M25G

Weidmüller Interface GmbH & Co. KG
Klingenbergstraße 26
D-32758 Detmold
Germany

www.weidmueller.com

Drawings

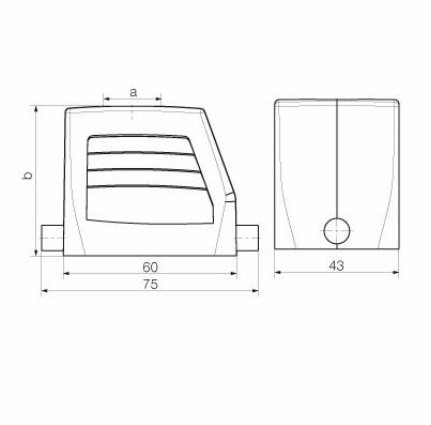

HDC 06B TOLU 1M25G

Weidmüller Interface GmbH & Co. KG
Klingenbergstraße 26
D-32758 Detmold
Germany

www.weidmueller.com

Accessories

Cover

The special die-cast alloy and the multi-layered surface sealing provide complete protection for the HDC housings.
The cleverly designed interlock system is manufactured from stainless steel. This guarantees a long lifespan with high resistance to corrosion and impact.
The housing interlock system provides integrated safety. Our unique, patented spring system provides the housing interlock with a secure grip and prevents accidental opening.
The laser marking allows for easy and quick identification. Each housing is permanently labelled with a laser marking so that each product can be quickly designated and positioned.
Weidmüller RockStar® IP 65 / NEMA Type 4X housings - your first choice for industrial housings with IP 65 protection.

General ordering data

Type	HDC 06B DMDL 1LB	Version
Order No.	1665210000	HDC enclosures, Installation size: 3, Protection degree: IP65, in
GTIN (EAN)	4008190421915	plugged condition, Cover for upper part of housing, End-locking
Qty.	1 ST	clamp, lower side, Standard, Size of cable entries: none