Data sheet

HDC 24D SDLU 2M32G

Weidmüller Interface GmbH & Co. KG
Klingenbergstraße 26
D-32758 Detmold
Germany

www.weidmueller.com

The special die-cast alloy and the multi-layered surface sealing provide complete protection for the HDC housings.
The cleverly designed interlock system is manufactured from stainless steel. This guarantees a long lifespan with high resistance to corrosion and impact.
The housing interlock system provides integrated safety. Our unique, patented spring system provides the housing interlock with a secure grip and prevents accidental opening.
The laser marking allows for easy and quick identification. Each housing is permanently labelled with a laser marking so that each product can be quickly designated and positioned.
Weidmüller RockStar® IP 65 / NEMA Type 4X housings - your first choice for industrial housings with IP 65 protection.

General ordering data

Version	HDC enclosures, Installation size: 4, Protection degree: IP65, in plugged condition, Base housing, End-locking clamp, lower side, high, with cover, Size of cable entries: M 32
Order No.	1787410000
Type	HDC 24D SDLU 2M32G
GTIN (EAN)	4032248204755
Qty.	1 items

HDC 24D SDLU 2M32G

Weidmüller Interface GmbH & Co. KG
Klingenbergstraße 26
D-32758 Detmold
Germany

www.weidmueller.com

Technical data

Approvals

Approvals	
ROHS	Conform
UL File Number Search	UL Website
Certificate No. (cURus)	E92202

Dimensions and weights

Height	96.5 mm	Height (inches)	3.7992 inch
Width	100.9 mm	Width (inches)	3.9724 inch
Mounting dimension - height	45 mm	Mounting dimension - width	82 mm
Net weight	410 g		

Temperatures

Limit temperature	-40 °C ... 125 °C

Environmental Product Compliance

RoHS Compliance Status	Compliant without exemption	
REACH SVHC	Potassium perfluorobutane sulfonate 29420-49-3	
SCIP	e98b2b24-ba23-41bf-8d19-0dda3647412f	
Chemical resistance	Substance	Acetone
	Chemical resistance	Conditionally resistant
	Substance	Drilling oil
	Chemical resistance	Resistant
	Substance	Diesel
	Chemical resistance	Resistant
	Substance	Ethyl alcohol
	Chemical resistance	Resistant
	Substance	Transmission oil
	Chemical resistance	Resistant
	Substance	Hydraulic oil
	Chemical resistance	Resistant
	Substance	Coolant
	Chemical resistance	Resistant
	Substance	Petroleum benzine
	Chemical resistance	Resistant
	Substance	Sweat
	Chemical resistance	Resistant
	Substance	Premium gasoline
	Chemical resistance	Conditionally resistant
	Substance	Water
	Chemical resistance	Resistant
	Substance	UV
	Chemical resistance	Unstable
	Substance	Ozone
	Chemical resistance	Unstable

Dimensions

Hole pitch length A2	82 mm	Cable entry	w. thread
Width housing C	43 mm	Width base C1	55.5 mm

HDC 24D SDLU 2M32G

Weidmüller Interface GmbH & Co. KG
Klingenbergstraße 26
D-32758 Detmold
Germany

www.weidmueller.com

Technical data

Total length housing	73 mm	Height of housing B	74 mm
Height of base B1	5 mm		

General data

Surface finish	Powder coating	Protection degree	IP65, in plugged condition

Version

Size of cable entries	M 32	Top part/bottom part/lid	lower part
Cover	with cover	Number of cable entry on top	0
Number of cable entry sideways	2	Design of cover	with cover
Design of housing	Base housing	Design of locking system	End-locking clamp, lower side
Design	high	Installation size	4
Cable entry	w. thread	Type	Base housing
Clamp version	End-locking clamp	Sealing	NBR
Internal thread	M 32	Colour (RAL)	RAL 7035
BG	4	Suitable for ModuPlug®	Yes

Classifications

ETIM 8.0	EC000437	ETIM 9.0	EC000437
ETIM 10.0	EC000437	ECLASS 14.0	27-44-02-02
ECLASS 15.0	27-44-02-02		

HDC 24D SDLU 2M32G

Weidmüller Interface GmbH & Co. KG
Klingenbergstraße 26
D-32758 Detmold
Germany

www.weidmueller.com
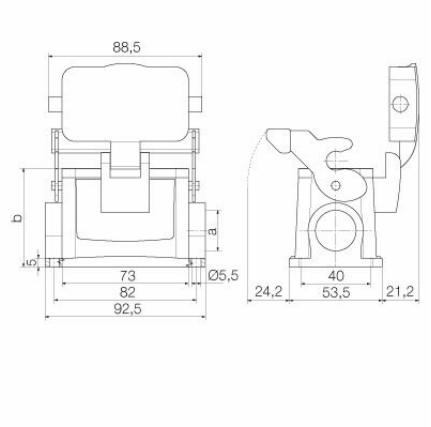
Drawings