Data sheet

HDC 40D SBU 2M32G

Weidmüller Interface GmbH & Co. KG
Klingenbergstraße 26
D-32758 Detmold
Germany

www.weidmueller.com

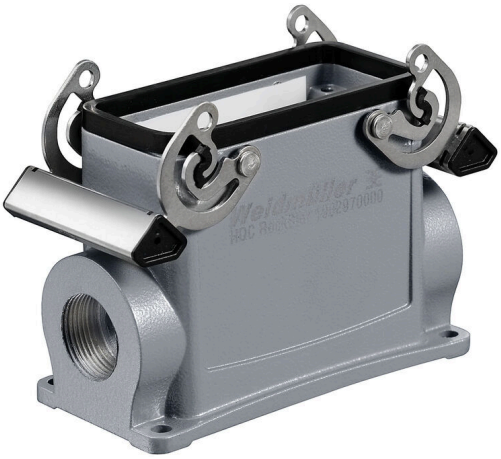

IP65

The special die-cast alloy and the multi-layered surface sealing provide complete protection for the HDC housings.
The cleverly designed interlock system is manufactured from stainless steel. This guarantees a long lifespan with high resistance to corrosion and impact.
The housing interlock system provides integrated safety. Our unique, patented spring system provides the housing interlock with a secure grip and prevents accidental opening.
The laser marking allows for easy and quick identification. Each housing is permanently labelled with a laser marking so that each product can be quickly designated and positioned.
Weidmüller RockStar® IP 65 / NEMA Type 4X housings - your first choice for industrial housings with IP 65 protection.

General ordering data

Version	HDC enclosures, Installation size: 6, Protection degree: IP65, in plugged condition, Base housing, Side-locking clamp on lower side, high, Size of cable entries: M 32
Order No.	1787110000
Type	HDC 40D SBU 2M32G
GTIN (EAN)	4032248204458
Qty.	1 items

HDC 40D SBU 2M32G

Weidmüller Interface GmbH & Co. KG
Klingenbergstraße 26
D-32758 Detmold
Germany

www.weidmueller.com

Technical data

Approvals

Approvals	
ROHS	Conform
UL File Number Search	UL Website
Certificate No. (cURus)	E92202

Dimensions and weights

Depth	117 mm	Depth (inches)	4.6063 inch
Height	84 mm	Height (inches)	3.3071 inch
Width	56.5 mm	Width (inches)	2.2244 inch
Mounting dimension - height	45 mm	Mounting dimension - width	105 mm
Net weight	431 g		

Temperatures

Limit temperature	-40 °C ... 125 °C

Environmental Product Compliance

RoHS Compliance Status	Compliant without exemption	
REACH SVHC	Potassium perfluorobutane sulfonate 29420-49-3	
SCIP	e98b2b24-ba23-41bf-8d19-0dda3647412f	
Chemical resistance	Substance	Acetone
	Chemical resistance	Conditionally resistant
	Substance	Drilling oil
	Chemical resistance	Resistant
	Substance	Diesel
	Chemical resistance	Resistant
	Substance	Ethyl alcohol
	Chemical resistance	Resistant
	Substance	Transmission oil
	Chemical resistance	Resistant
	Substance	Hydraulic oil
	Chemical resistance	Resistant
	Substance	Coolant
	Chemical resistance	Resistant
	Substance	Petroleum benzine
	Chemical resistance	Resistant
	Substance	Sweat
	Chemical resistance	Resistant
	Substance	Premium gasoline
	Chemical resistance	Conditionally resistant
	Substance	Water
	Chemical resistance	Resistant
	Substance	UV
	Chemical resistance	Unstable
	Substance	Ozone
	Chemical resistance	Unstable

HDC 40D SBU 2M32G

Weidmüller Interface GmbH & Co. KG
Klingenbergstraße 26
D-32758 Detmold
Germany

www.weidmueller.com

Technical data

Dimensions

Hole pitch length A2	105 mm	Cable entry	w. thread
Width housing C	43 mm	Width base C1	56.5 mm
Total length housing	93.3 mm	Height of housing B	84 mm
Height of base B1	5 mm		

General data

Housing main material	diecast aluminium	Surface finish	Powder coating
Protection degree	IP65, in plugged condition	EMC housings	No
Material of locking element	Stainless steel, rust-proof		

Version

Size of cable entries	M 32	Top part/bottom part/lid	lower part
Cover	without cover	Number of cable entry on top	0
Number of cable entry sideways	2	Design of housing	Base housing
Design of locking system	Side-locking clamp on lower side	Design	high
Installation size	6	Cable entry	w. thread
Type	Base housing	Clamp version	Side-locking clamp
Sealing	NBR	Internal thread	M 32
Colour (RAL)	RAL 7035	BG	6
Suitable for ModuPlug®	Yes		

Classifications

ETIM 8.0	EC000437	ETIM 9.0	EC000437
ETIM 10.0	EC000437	ECLASS 14.0	27-44-02-02
ECLASS 15.0	27-44-02-02		

HDC 40D SBU 2M32G

Weidmüller Interface GmbH & Co. KG
Klingenbergstraße 26
D-32758 Detmold
Germany

www.weidmueller.com

Drawings

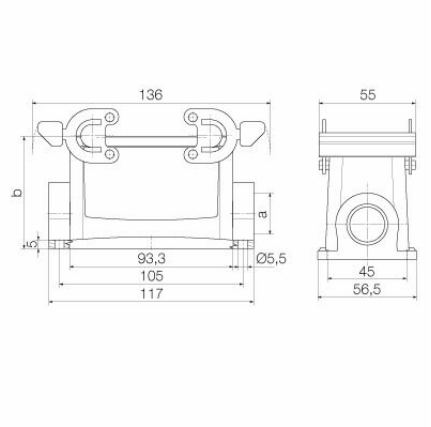

HDC 40D SBU 2M32G

Weidmüller Interface GmbH & Co. KG
Klingenbergstraße 26
D-32758 Detmold
Germany

www.weidmueller.com

Accessories

Hood, Cable Entry sideways

The special die-cast alloy and the multi-layered surface sealing provide complete protection for the HDC housings.
The cleverly designed interlock system is manufactured from stainless steel. This guarantees a long lifespan with high resistance to corrosion and impact.
The housing interlock system provides integrated safety. Our unique, patented spring system provides the housing interlock with a secure grip and prevents accidental opening.
The laser marking allows for easy and quick identification. Each housing is permanently labelled with a laser marking so that each product can be quickly designated and positioned.
Weidmüller RockStar® IP 65 / NEMA Type 4X housings - your first choice for industrial housings with IP 65 protection.

General ordering data

Type	HDC 16B TSBU 1PG21G	Version
Order No.	1656480000	HDC enclosures, Installation size: 6, Protection degree: IP65, in
GTIN (EAN)	4008190409494	plugged condition, Cable entry from side, Plug housing, Side-locking
Qty.	1 ST	clamp on lower side, Standard, Size of cable entries: PG 21
Type	HDC 40D TSBU 1PG21G	Version
Order No.	1656520000	HDC enclosures, Installation size: 6, Protection degree: IP65, in
GTIN (EAN)	4008190409531	plugged condition, Cable entry from side, Plug housing, Side-locking
Qty.	1 ST	clamp on lower side, high, Size of cable entries: PG 21
Type	HDC 40D TSBU 1PG29G	Version
Order No.	1656540000	HDC enclosures, Installation size: 6, Protection degree: IP65, in
GTIN (EAN)	4008190409555	plugged condition, Cable entry from side, Plug housing, Side-locking
Qty.	1 ST	clamp on lower side, high, Size of cable entries: PG 29
Type	HDC 40D TSBU 1M32G	Version
Order No.	1787000000	HDC enclosures, Installation size: 6, Protection degree: IP65, in
GTIN (EAN)	4032248204243	plugged condition, Cable entry from side, Plug housing, Side-locking
Qty.	1 ST	clamp on lower side, high, Size of cable entries: M 32
Type	HDC 40D TSBU 1M25G	Version
Order No.	1787010000	HDC enclosures, Installation size: 6, Protection degree: IP65, in
GTIN (EAN)	4032248204250	plugged condition, Cable entry from side, Plug housing, Side-locking
Qty.	1 ST	clamp on lower side, high, Size of cable entries: M 25
Type	HDC 16B TSBU 1M25G	Version
Order No.	1788180000	HDC enclosures, Installation size: 6, Protection degree: IP65, in
GTIN (EAN)	4032248205714	plugged condition, Cable entry from side, Plug housing, Side-locking
Qty.	1 ST	clamp on lower side, Standard, Size of cable entries: M 25
Type	HDC 16B TSBU 1M40G	Version
Order No.	1809620000	HDC enclosures, Installation size: 6, Protection degree: IP65, in
GTIN (EAN)	4032248284979	plugged condition, Cable entry from side, Plug housing, Side-locking
Qty.	1 ST	clamp on lower side, Standard, Size of cable entries: M 40
Type	HDC 40D TSBU 1M40G	Version
Order No.	1904800000	HDC enclosures, Installation size: 6, Protection degree: IP65, in
GTIN (EAN)	4032248521852	plugged condition, Cable entry from side, Plug housing, Side-locking
Qty.	1 ST	clamp on lower side, high, Size of cable entries: M 40

HDC 40D SBU 2M32G

Weidmüller Interface GmbH & Co. KG
Klingenbergstraße 26
D-32758 Detmold
Germany

www.weidmueller.com

Accessories

Hood, Cable Entry at top

The special die-cast alloy and the multi-layered surface sealing provide complete protection for the HDC housings.
The cleverly designed interlock system is manufactured from stainless steel. This guarantees a long lifespan with high resistance to corrosion and impact.
The housing interlock system provides integrated safety. Our unique, patented spring system provides the housing interlock with a secure grip and prevents accidental opening.
The laser marking allows for easy and quick identification. Each housing is permanently labelled with a laser marking so that each product can be quickly designated and positioned.
Weidmüller RockStar® IP 65 / NEMA Type 4X housings - your first choice for industrial housings with IP 65 protection.

General ordering data

Type	HDC 40D TOBU 2M25	Version
Order No.	1208380000	HDC enclosures, Installation size: 6, Protection degree: IP65, in
GTIN (EAN)	4032248100248	plugged condition, Cable entry from top, Plug housing, Side-locking
Qty.	1 ST	clamp on lower side, high, Size of cable entries: M 25
Type	HDC 16B TOBU 1PG21G	Version
Order No.	1656590000	HDC enclosures, Installation size: 6, Protection degree: IP65, in
GTIN (EAN)	4008190409609	plugged condition, Cable entry from top, Plug housing, Side-locking
Qty.	1 ST	clamp on lower side, Standard, Size of cable entries: PG 21
Type	HDC 40D TOBU 1PG21G	Version
Order No.	1656630000	HDC enclosures, Installation size: 6, Protection degree: IP65, in
GTIN (EAN)	4008190409647	plugged condition, Cable entry from top, Plug housing, Side-locking
Qty.	1 ST	clamp on lower side, high, Size of cable entries: PG 21
Type	HDC 40D TOBU 1PG29G	Version
Order No.	1656650000	HDC enclosures, Installation size: 6, Protection degree: IP65, in
GTIN (EAN)	4008190409661	plugged condition, Cable entry from top, Plug housing, Side-locking
Qty.	1 ST	clamp on lower side, high, Size of cable entries: PG 29
Type	HDC 40D TOBU 1M32G	Version
Order No.	1787060000	HDC enclosures, Installation size: 6, Protection degree: IP65, in
GTIN (EAN)	4032248204304	plugged condition, Cable entry from top, Plug housing, Side-locking
Qty.	1 ST	clamp on lower side, high, Size of cable entries: M 32
Type	HDC 40D TOBU 1M25G	Version
Order No.	1787070000	HDC enclosures, Installation size: 6, Protection degree: IP65, in
GTIN (EAN)	4032248204410	plugged condition, Cable entry from top, Plug housing, Side-locking
Qty.	1 ST	clamp on lower side, high, Size of cable entries: M 25
Type	HDC 16B TOBU 1M25G	Version
Order No.	1788210000	HDC enclosures, Installation size: 6, Protection degree: IP65, in
GTIN (EAN)	4032248205745	plugged condition, Cable entry from top, Plug housing, Side-locking
Qty.	1 ST	clamp on lower side, Standard, Size of cable entries: M 25

HDC 40D SBU 2M32G

Weidmüller Interface GmbH & Co. KG
Klingenbergstraße 26
D-32758 Detmold
Germany

www.weidmueller.com

Accessories

Cover

The special die-cast alloy and the multi-layered surface sealing provide complete protection for the HDC housings.
The cleverly designed interlock system is manufactured from stainless steel. This guarantees a long lifespan with high resistance to corrosion and impact.
The housing interlock system provides integrated safety. Our unique, patented spring system provides the housing interlock with a secure grip and prevents accidental opening.
The laser marking allows for easy and quick identification. Each housing is permanently labelled with a laser marking so that each product can be quickly designated and positioned.
Weidmüller RockStar® IP 65 / NEMA Type 4X housings - your first choice for industrial housings with IP 65 protection.

General ordering data

Type	HDC 16B DODQ 4BO	Version
Order No.	1665260000	HDC enclosures, Installation size: 6, Protection degree: IP65, in
GTIN (EAN)	4008190421960	plugged condition, Cover for lower part of housing, Side-locking
Qty.	1 ST	clamp on lower side, Standard, Size of cable entries: none