Data sheet

SL-SMT 5.08HC/19/90LF 3.2SN BK BX

Weidmüller Interface GmbH & Co. KG
Klingenbergstraße 26
D-32758 Detmold
Germany

www.weidmueller.com

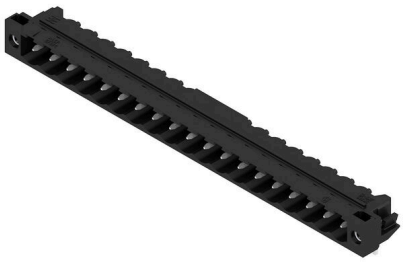

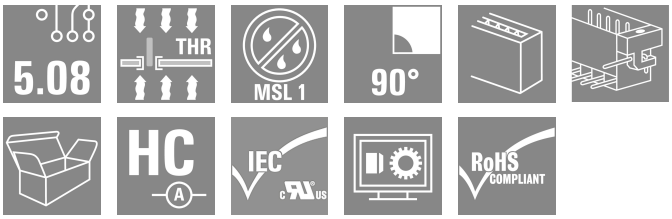

High-temperature-resistant pin header, packed in box or tape. On tape, with 1.5 mm solder pin, optimised for automatic assembly. 3.2 mm solder pin suitable for reflow and wave soldering. The pin headers provide space for labelling and can be coded. HC = High Current.

General ordering data

Version	PCB plug-in connector, male header, Solder flange, THT/THR solder connection, 5.08 mm, Number of poles: 19, 90°, Solder pin length (l): 3.2 mm, tinned, black, Box
Order No.	1780600000
Type	SL-SMT 5.08HC/19/90LF 3.2SN BK BX
GTIN (EAN)	4032248165902
Qty.	12 items
Product data	IEC: 400 V / 27.5 A UL: 300 V / 18.5 A
Packaging	Box

SL-SMT 5.08HC/19/90LF 3.2SN BK BX

Weidmüller Interface GmbH & Co. KG
Klingenbergstraße 26
D-32758 Detmold
Germany

www.weidmueller.com

Technical data

Approvals

Approvals	
ROHS	Conform
UL File Number Search	UL Website
Certificate No. (UR)	E60693

Dimensions and weights

Depth	12 mm	Depth (inches)	0.4724 inch
Height	11.7 mm	Height (inches)	0.4606 inch
Height of lowest version	8.5 mm	Width	106.32 mm
Width (inches)	4.1858 inch	Net weight	8.5 g

Environmental Product Compliance

RoHS Compliance Status	Compliant without exemption	
REACH SVHC	No SVHC above 0.1 wt%	
Product Carbon Footprint	Cradle to gate	0,180 kg CO2 eq.

System specifications

Product family	OMNIMATE Signal - series BL/SL 5.08	Type of connection	Board connection
Mounting onto the PCB	THT/THR solder connection	Pitch in mm (P)	5.08 mm
Pitch in inches (P)	0.200 "	Outgoing elbow	90°
Number of poles	19	Number of solder pins per pole	1
Solder pin length (l)	3.2 mm	Solder pin length tolerance	0 / -0.3 mm
Solder pin dimensions	d = 1.2 mm, Octagonal	Solder eyelet hole diameter (D)	1.5 mm
Solder eyelet hole diameter tolerance (D)	+ 0,1 mm	L1 in mm	91.44 mm
L1 in inches	3.600 "	Number of rows	1
Pin series quantity	1	Touch-safe protection acc. to DIN VDE 57 106	finger-safe unplugged/ back-of-hand-safe plugged
Touch-safe protection acc. to DIN VDE 0470	IP20 plugged/ IP10 unplugged	Protection degree	IP20
Volume resistance	≤5 mΩ	Can be coded	Yes
Plugging force/pole, max.	9 N	Pulling force/pole, max.	7 N

Material data

Insulating material	LCP GF	Colour	black
Colour chart (similar)	RAL 9011	Insulating material group	IIIa
Comparative Tracking Index (CTI)	≥ 175	Moisture Level (MSL)	1
UL 94 flammability rating	V-0	Contact material	Cu-alloy
Contact surface	tinned	Layer structure of solder connection	1...3 µm Ni / 2...4 µm Sn matt
Layer structure of plug contact	1...3 µm Ni / 2...4 µm Sn matt	Storage temperature, min.	-40 °C
Storage temperature, max.	70 °C	Operating temperature, min.	-50 °C
Operating temperature, max.	100 °C	Temperature range, installation, min.	-30 °C
Temperature range, installation, max.	100 °C		

SL-SMT 5.08HC/19/90LF 3.2SN BK BX

Weidmüller Interface GmbH & Co. KG
Klingenbergstraße 26
D-32758 Detmold
Germany

www.weidmueller.com

Technical data

Rated data acc. to IEC

tested acc. to standard	IEC 60664-1, IEC 61984	Rated current, min. number of poles (Tu=20°C)	27.5 A
Rated current, max. number of poles (Tu=20°C)	19 A	Rated current, min. number of poles (Tu=40°C)	24 A
Rated current, max. number of poles (Tu=40°C)	16.5 A	Rated voltage for surge voltage class / pollution degree II/2	400 V
Rated voltage for surge voltage class / pollution degree III/2	320 V	Rated voltage for surge voltage class / pollution degree III/3	250 V
Rated impulse voltage for surge voltage class/ pollution degree II/2	4 kV	Rated impulse voltage for surge voltage class/ pollution degree III/2	4 kV
Rated impulse voltage for surge voltage class/ contamination degree III/3	4 kV		

Rated data acc. to CSA

Institute (CSA)	CSA	Certificate No. (CSA)	200039-1176845
Rated voltage (Use group B / CSA)	300 V	Rated voltage (Use group D / CSA)	300 V
Rated current (Use group B / CSA)	18.5 A	Rated current (Use group D / CSA)	18.5 A
Reference to approval values	Specifications are maximum values, details - see approval certificate.		

Rated data acc. to UL 1059

Institute (UR)	UR	Certificate No. (UR)	E60693
Rated voltage (Use group B / UL 1059)	300 V	Rated voltage (Use group D / UL 1059)	300 V
Rated current (Use group B / UL 1059)	18.5 A	Rated current (Use group D / UL 1059)	10 A
Reference to approval values	Specifications are maximum values, details - see approval certificate.		

Packing

Packaging	Box	VPE length	341.00 mm
VPE width	135.00 mm	VPE height	21.00 mm

Important note

IPC conformity	Conformity: The products are developed, manufactured and delivered according international recognized standards and norms and comply with the assured properties in the data sheet resp. fulfill decorative properties in accordance with IPC-A-610 "Class 2". Further claims on the products can be evaluated on request.
Notes	• Gold-plated contact surfaces on request • Rated current related to rated cross-section & min. No. of poles. • Diameter of solder eyelet D = 1.4+0.1mm • Solder eyelet diameter D = 1.5 + 0.1 mm, from 9 poles • P on drawing = pitch • Rated data refer only to the component itself. Clearance and creepage distances to other components are to be designed in accordance with the relevant application standards. • In accordance with IEC 61984, OMNIMATE-connectors are connectors without breaking capacity (COC). During designated use, connectors are not allowed to be engaged or disengaged when live or under load • Long term storage of the product with average temperature of 50 °C and maximum humidity 70%, 36 months

Classifications

ETIM 8.0	EC002637	ETIM 9.0	EC002637
ETIM 10.0	EC002637	ECLASS 14.0	27-46-02-01

SL-SMT 5.08HC/19/90LF 3.2SN BK BX

Weidmüller Interface GmbH & Co. KG
Klingenbergstraße 26
D-32758 Detmold
Germany

www.weidmueller.com

Technical data

ECLASS 15.0	27-46-02-01		

SL-SMT 5.08HC/19/90LF 3.2SN BK BX

Weidmüller Interface GmbH & Co. KG
Klingenbergstraße 26
D-32758 Detmold
Germany

www.weidmueller.com

Drawings

Product image

Dimensional drawing

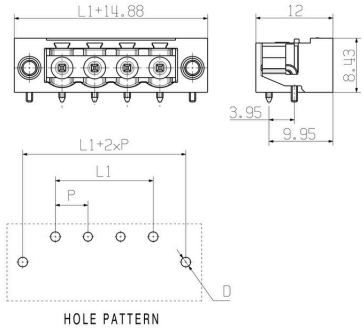

Product benefits

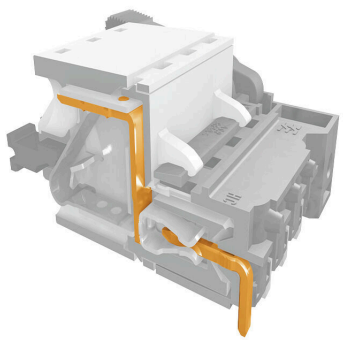

Safe power transmissionProven properties

SL-SMT 5.08HC/19/90LF 3.2SN BK BX

Weidmüller Interface GmbH & Co. KG
Klingenbergstraße 26
D-32758 Detmold
Germany

www.weidmueller.com

Accessories

LED Light guides

Effective: the link between LED and front panel.
Floodlight indicators allow users to monitor the switching states without requiring a special design: optical plastic directs the light from standard LEDs around a bend into the connectors or through the front plate.
The fibre-optic elements are simply clipped behind the relevant 90° bend male connectors (90° outlet direction).
Versions with different incoming light beam heights achieve maximum light efficiency for LEDs with different designs or heights.
The advantages compared to conventional solutions:
- No additional LED circuit board required behind the front panel
- No "long-legged" LEDs with separate mounting required
- Bent fibre-optic cable line for maximum light efficiency
- Uncomplicated front plate bore holes due to circular shape of outgoing light beam
- Easy to maintain correct clearance and creepage distance
- Can be partitioned for smaller pole numbers

The result: simplified manufacturing process, reduced costs and simplified design

General ordering data

Type	SL FLA 2,3/1	Version
Order No.	1636670000	PCB plug-in connector, Accessories, Flood-light display, Transparent,
GTIN (EAN)	4008190409975	Number of poles: 1
Qty.	100 ST	
Type	SL FLA 2,3/24	Version
Order No.	1636680000	PCB plug-in connector, Accessories, Flood-light display, Transparent,
GTIN (EAN)	4008190409968	Number of poles: 1
Qty.	10 ST	

Additional accessories

No task is too small when creating the perfect solution. Connections form just one part of the overall process. Small details are often the key to the perfect solution in applications where potentials are tested, grouped or even isolated.
A system is not a system without small but useful details:
- Test plugs - ensure reliable pick-up from diagnostic sockets
- Cross-connectors - ensure a stable electrical distribution contact directly at the connection
- Compartment partition elements - divide a large number of male connectors into several separate socket connector channels
- Locks and clips - optional vibration-resistant clip-on connection or mounting for male and female connectors

In tandem with the manufacturing process and application - more accessories = smaller workload

SL-SMT 5.08HC/19/90LF 3.2SN BK BX

Weidmüller Interface GmbH & Co. KG
Klingenbergstraße 26
D-32758 Detmold
Germany

www.weidmueller.com

Accessories

General ordering data

Type	SL AT SW	Version
Order No.	1770240000	PCB plug-in connector, Accessories, Spacer, black, Number of poles: 1
GTIN (EAN)	4032248117710	
Qty.	100 ST	

Coding elements

Only connects what is supposed to be connected: the right connection at the right place.
Coding elements and locking devices clearly assign connecting elements during the manufacturing process and operation
The coding elements and locking devices are inserted prior to assembly or during the cable assembly phase.
The Weidmüller alternative: configure online using the variant configurator to precode prior to delivery.
Incorrect assembly on the circuit board and incorrect plugging of connecting elements is no longer possible.
The advantage: no troubleshooting during manufacture and no operational errors by the user.

General ordering data

Type	BLZ/SL KO BK BX	Version
Order No.	1545710000	PCB plug-in connector, Accessories, Coding element, black, Number
GTIN (EAN)	4008190087142	of poles: 1
Qty.	50 ST	
Type	BLZ/SL KO OR BX	Version
Order No.	1573010000	PCB plug-in connector, Accessories, Coding element, orange, Number
GTIN (EAN)	4008190048396	of poles: 1
Qty.	100 ST	

SL-SMT 5.08HC/19/90LF 3.2SN BK BX

Weidmüller Interface GmbH & Co. KG
Klingenbergstraße 26
D-32758 Detmold
Germany

www.weidmueller.com

Accessories

LED Light guides

Effective: the link between LED and front panel.
Floodlight indicators allow users to monitor the switching states without requiring a special design: optical plastic directs the light from standard LEDs around a bend into the connectors or through the front plate.
The fibre-optic elements are simply clipped behind the relevant 90° bend male connectors (90° outlet direction).
Versions with different incoming light beam heights achieve maximum light efficiency for LEDs with different designs or heights.
The advantages compared to conventional solutions:

- No additional LED circuit board required behind the front panel
- No "long-legged" LEDs with separate mounting required
- Bent fibre-optic cable line for maximum light efficiency
- Uncomplicated front plate bore holes due to circular shape of outgoing light beam
- Easy to maintain correct clearance and creepage distance
- Can be partitioned for smaller pole numbers

The result: simplified manufacturing process, reduced costs and simplified design

General ordering data

Type	SL FLA 1.5/1	Version
Order No.	1580100000	PCB plug-in connector, Accessories, Flood-light display, Transparent,
GTIN (EAN)	4008190152475	Number of poles: 1
Qty.	100 ST	
Type	SL FLA 3.8/1	Version
Order No.	1580110000	PCB plug-in connector, Accessories, Flood-light display, Transparent,
GTIN (EAN)	4008190050740	Number of poles: 1
Qty.	100 ST	
Type	SL FLA 9.0/1	Version
Order No.	1580120000	PCB plug-in connector, Accessories, Flood-light display, Transparent,
GTIN (EAN)	4008190031909	Number of poles: 1
Qty.	100 ST	

SL-SMT 5.08HC/19/90LF 3.2SN BK BX

Weidmüller Interface GmbH & Co. KG
Klingenbergstraße 26
D-32758 Detmold
Germany

www.weidmueller.com

Accessories

Additional accessories

No task is too small when creating the perfect solution. Connections form just one part of the overall process. Small details are often the key to the perfect solution in applications where potentials are tested, grouped or even isolated.
A system is not a system without small but useful details:

- Test plugs - ensure reliable pick-up from diagnostic sockets
- Cross-connectors - ensure a stable electrical distribution contact directly at the connection
- Compartment partition elements - divide a large number of male connectors into several separate socket connector channels
- Locks and clips - optional vibration-resistant clip-on connection or mounting for male and female connectors

In tandem with the manufacturing process and application - more accessories = smaller workload

General ordering data

Type	SL AT OR	Version
Order No.	1598300000	PCB plug-in connector, Accessories, Spacer, orange, Number of poles:
GTIN (EAN)	4008190189266	1
Qty.	100 ST	