Data sheet

# SL-SMT 5.08HC/03/180LF 1.5SN BK BX

**Weidmüller Interface GmbH & Co. KG**
Klingenbergstraße 26
D-32758 Detmold
Germany

www.weidmueller.com

## Product image

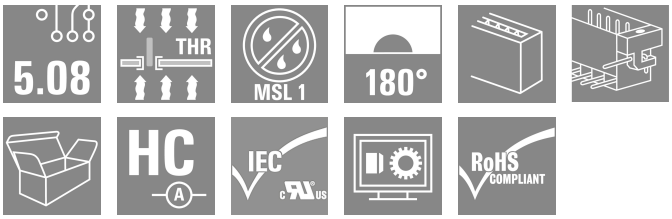


High-temperature-resistant pin header, packed in box or tape. On tape, with 1.5 mm solder pin, optimised for automatic assembly. 3.2 mm solder pin suitable for reflow and wave soldering. The pin headers provide space for labelling and can be coded. HC = High Current.

### General ordering data

| | |
|---|---|
| Version | PCB plug-in connector, male header, Solder flange, THT/THR solder connection, 5.08 mm, Number of poles: 3, 180°, Solder pin length (l): 1.5 mm, tinned, black, Box |
| Order No. | 1776372001 |
| Type | SL-SMT 5.08HC/03/180LF 1.5SN BK BX |
| GTIN (EAN) | 4032248159154 |
| Qty. | 72 items |
| Product data | IEC: 400 V / 27.5 A<br>UL: 300 V / 18.5 A |
| Packaging | Box |

# SL-SMT 5.08HC/03/180LF 1.5SN BK BX

**Weidmüller Interface GmbH & Co. KG**
Klingenbergstraße 26
D-32758 Detmold
Germany

www.weidmueller.com

## Technical data

### Approvals

| | |
|---|---|
| Approvals | |
| ROHS | Conform |
| UL File Number Search | UL Website |
| Certificate No. (UR) | E60693 |

### Dimensions and weights

| | | | |
|---|---|---|---|
| Depth | 8.5 mm | Depth (inches) | 0.3346 inch |
| Height | 13.5 mm | Height (inches) | 0.5315 inch |
| Height of lowest version | 12 mm | Width | 25.04 mm |
| Width (inches) | 0.9858 inch | Net weight | 2.45 g |

### Environmental Product Compliance

| | | |
|---|---|---|
| RoHS Compliance Status | Compliant without exemption | |
| REACH SVHC | No SVHC above 0.1 wt% | |
| Product Carbon Footprint | Cradle to gate | 0,115 kg CO2 eq. |

### System specifications

| | | | |
|---|---|---|---|
| Product family | OMNIMATE Signal - series BL/SL 5.08 | Type of connection | Board connection |
| Mounting onto the PCB | THT/THR solder connection | Pitch in mm (P) | 5.08 mm |
| Pitch in inches (P) | 0.200 " | Outgoing elbow | 180° |
| Number of poles | 3 | Number of solder pins per pole | 1 |
| Solder pin length (l) | 1.5 mm | Solder pin length tolerance | 0 / -0.3 mm |
| Solder pin dimensions | d = 1.2 mm, Octagonal | Solder eyelet hole diameter (D) | 1.5 mm |
| Solder eyelet hole diameter tolerance (D) | + 0,1 mm | L1 in mm | 10.16 mm |
| L1 in inches | 0.400 " | Number of rows | 1 |
| Pin series quantity | 1 | Touch-safe protection acc. to DIN VDE 57 106 | finger-safe unplugged/ back-of-hand-safe plugged |
| Touch-safe protection acc. to DIN VDE 0470 | IP20 plugged/ IP10 unplugged | Protection degree | IP20 |
| Volume resistance | ≤5 mΩ | Can be coded | Yes |
| Plugging force/pole, max. | 9 N | Pulling force/pole, max. | 7 N |

### Material data

| | | | |
|---|---|---|---|
| Insulating material | LCP GF | Colour | black |
| Colour chart (similar) | RAL 9011 | Insulating material group | IIIa |
| Comparative Tracking Index (CTI) | ≥ 175 | Moisture Level (MSL) | 1 |
| UL 94 flammability rating | V-0 | Contact material | Cu-alloy |
| Contact surface | tinned | Layer structure of solder connection | 1...3 µm Ni / 2...4 µm Sn matt |
| Layer structure of plug contact | 1...3 µm Ni / 2...4 µm Sn matt | Storage temperature, min. | -40 °C |
| Storage temperature, max. | 70 °C | Operating temperature, min. | -50 °C |
| Operating temperature, max. | 100 °C | Temperature range, installation, min. | -30 °C |
| Temperature range, installation, max. | 100 °C | | |

# SL-SMT 5.08HC/03/180LF 1.5SN BK BX

**Weidmüller Interface GmbH & Co. KG**
Klingenbergstraße 26
D-32758 Detmold
Germany

www.weidmueller.com

## Technical data

### Rated data acc. to IEC

| | | | |
|---|---|---|---|
| tested acc. to standard | IEC 60664-1, IEC 61984 | Rated current, min. number of poles (Tu=20°C) | 27.5 A |
| Rated current, max. number of poles (Tu=20°C) | 19 A | Rated current, min. number of poles (Tu=40°C) | 24 A |
| Rated current, max. number of poles (Tu=40°C) | 16.5 A | Rated voltage for surge voltage class / pollution degree II/2 | 400 V |
| Rated voltage for surge voltage class / pollution degree III/2 | 320 V | Rated voltage for surge voltage class / pollution degree III/3 | 250 V |
| Rated impulse voltage for surge voltage class/ pollution degree II/2 | 4 kV | Rated impulse voltage for surge voltage class/ pollution degree III/2 | 4 kV |
| Rated impulse voltage for surge voltage class/ contamination degree III/3 | 4 kV | | |

### Rated data acc. to CSA

| | | | |
|---|---|---|---|
| Institute (CSA) | CSA | Certificate No. (CSA) | 200039-1176845 |
| Rated voltage (Use group B / CSA) | 300 V | Rated voltage (Use group D / CSA) | 300 V |
| Rated current (Use group D / CSA) | 18.5 A | Reference to approval values | Specifications are maximum values, details - see approval certificate. |

### Rated data acc. to UL 1059

| | | | |
|---|---|---|---|
| Institute (UR) | UR | Certificate No. (UR) | E60693 |
| Rated voltage (Use group B / UL 1059) | 300 V | Rated voltage (Use group D / UL 1059) | 300 V |
| Rated current (Use group B / UL 1059) | 18.5 A | Rated current (Use group D / UL 1059) | 10 A |
| Reference to approval values | Specifications are maximum values, details - see approval certificate. | | |

### Packing

| | | | |
|---|---|---|---|
| Packaging | Box | VPE length | 341.00 mm |
| VPE width | 133.00 mm | VPE height | 21.00 mm |

### Important note

| | |
|---|---|
| IPC conformity | Conformity: The products are developed, manufactured and delivered according international recognized standards and norms and comply with the assured properties in the data sheet resp. fulfill decorative properties in accordance with IPC-A-610 "Class 2". Further claims on the products can be evaluated on request. |
| Notes | • Gold-plated contact surfaces on request<br>• Rated current related to rated cross-section & min. No. of poles.<br>• Diameter of solder eyelet D = 1.4+0.1mm<br>• Solder eyelet diameter D = 1.5 + 0.1 mm, from 9 poles<br>• P on drawing = pitch<br>• Rated data refer only to the component itself. Clearance and creepage distances to other components are to be designed in accordance with the relevant application standards.<br>• In accordance with IEC 61984, OMNIMATE-connectors are connectors without breaking capacity (COC). During designated use, connectors are not allowed to be engaged or disengaged when live or under load<br>• Long term storage of the product with average temperature of 50 °C and maximum humidity 70%, 36 months |

### Classifications

| | | | |
|---|---|---|---|
| ETIM 8.0 | EC002637 | ETIM 9.0 | EC002637 |
| ETIM 10.0 | EC002637 | ECLASS 14.0 | 27-46-02-01 |
| ECLASS 15.0 | 27-46-02-01 | | |

# SL-SMT 5.08HC/03/180LF 1.5SN BK BX

**Weidmüller Interface GmbH & Co. KG**
Klingenbergstraße 26
D-32758 Detmold
Germany

www.weidmueller.com

## Drawings

### Product image

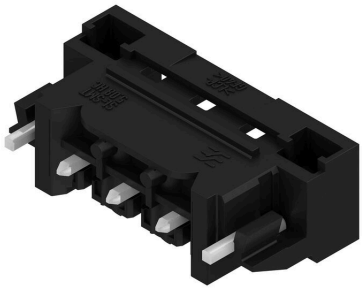

### Dimensional drawing

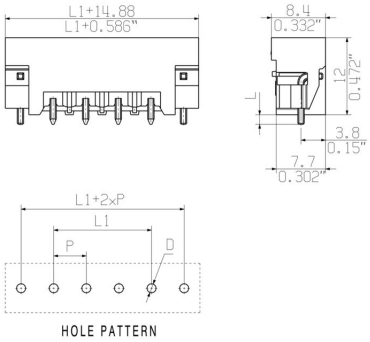


### Product benefits

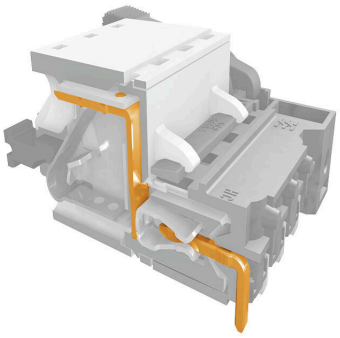

Safe power transmissionProven properties

# SL-SMT 5.08HC/03/180LF 1.5SN BK BX

**Weidmüller Interface GmbH & Co. KG**
Klingenbergstraße 26
D-32758 Detmold
Germany

www.weidmueller.com

## Accessories

### Additional accessories

No task is too small when creating the perfect solution. Connections form just one part of the overall process. Small details are often the key to the perfect solution in applications where potentials are tested, grouped or even isolated.
A system is not a system without small but useful details:

- Test plugs - ensure reliable pick-up from diagnostic sockets
- Cross-connectors - ensure a stable electrical distribution contact directly at the connection
- Compartment partition elements - divide a large number of male connectors into several separate socket connector channels
- Locks and clips - optional vibration-resistant clip-on connection or mounting for male and female connectors

In tandem with the manufacturing process and application - more accessories = smaller workload

### General ordering data

| | | |
|---|---|---|
| Type | SL AT SW | Version |
| Order No. | 1770240000 | PCB plug-in connector, Accessories, Spacer, black, Number of poles: 1 |
| GTIN (EAN) | 4032248117710 | |
| Qty. | 100 ST | |

### Coding elements

Only connects what is supposed to be connected: the right connection at the right place.
Coding elements and locking devices clearly assign connecting elements during the manufacturing process and operation
The coding elements and locking devices are inserted prior to assembly or during the cable assembly phase.
The Weidmüller alternative: configure online using the variant configurator to precode prior to delivery.
Incorrect assembly on the circuit board and incorrect plugging of connecting elements is no longer possible.
The advantage: no troubleshooting during manufacture and no operational errors by the user.

### General ordering data

| | | |
|---|---|---|
| Type | BLZ/SL KO BK BX | Version |
| Order No. | 1545710000 | PCB plug-in connector, Accessories, Coding element, black, Number |
| GTIN (EAN) | 4008190087142 | of poles: 1 |
| Qty. | 50 ST | |
| Type | BLZ/SL KO OR BX | Version |
| Order No. | 1573010000 | PCB plug-in connector, Accessories, Coding element, orange, Number |
| GTIN (EAN) | 4008190048396 | of poles: 1 |
| Qty. | 100 ST | |

# SL-SMT 5.08HC/03/180LF 1.5SN BK BX

**Weidmüller Interface GmbH & Co. KG**
Klingenbergstraße 26
D-32758 Detmold
Germany

www.weidmueller.com

## Accessories

### Additional accessories

No task is too small when creating the perfect solution. Connections form just one part of the overall process. Small details are often the key to the perfect solution in applications where potentials are tested, grouped or even isolated.
A system is not a system without small but useful details:

- Test plugs - ensure reliable pick-up from diagnostic sockets
- Cross-connectors - ensure a stable electrical distribution contact directly at the connection
- Compartment partition elements - divide a large number of male connectors into several separate socket connector channels
- Locks and clips - optional vibration-resistant clip-on connection or mounting for male and female connectors

In tandem with the manufacturing process and application - more accessories = smaller workload

### General ordering data

| | | |
|---|---|---|
| Type | SL AT OR | Version |
| Order No. | 1598300000 | PCB plug-in connector, Accessories, Spacer, orange, Number of poles: |
| GTIN (EAN) | 4008190189266 | 1 |
| Qty. | 100 ST | |