Data sheet

SLD 5.08V/04/90B 3.2 SN OR BX

Weidmüller Interface GmbH & Co. KG
Klingenbergstraße 26
D-32758 Detmold
Germany

www.weidmueller.com

Product image

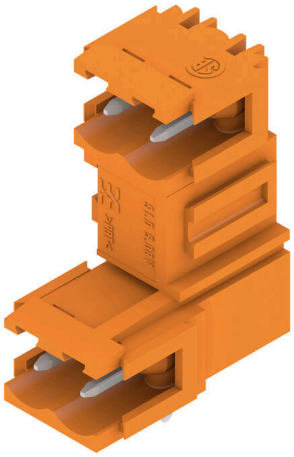

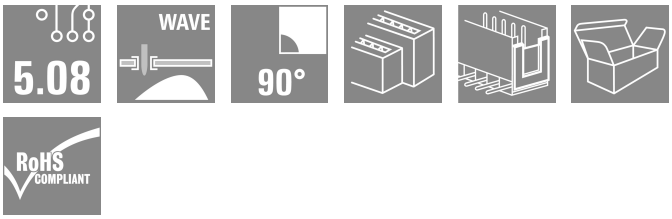

Pin headers with solder pin length optimised for wave flow soldering. The male connectors provide space for labelling and can be coded. HC = High Current.

General ordering data

Version	PCB plug-in connector, male header, Dovetails for fixing blocks, THT solder connection, 5.08 mm, Number of poles: 4, 90°, Solder pin length (l): 3.2 mm, tinned, orange, Box
Order No.	1726280000
Type	SLD 5.08V/04/90B 3.2 SN OR BX
GTIN (EAN)	4032248061259
Qty.	50 items
Product data	IEC: 320 V / 17 A UL: 300 V / 10 A
Packaging	Box

SLD 5.08V/04/90B 3.2 SN OR BX

Weidmüller Interface GmbH & Co. KG
Klingenbergstraße 26
D-32758 Detmold
Germany

www.weidmueller.com

Technical data

Approvals

Approvals	
ROHS	Conform
UL File Number Search	UL Website
Certificate No. (UR)	E60693

Dimensions and weights

Depth	22 mm	Depth (inches)	0.8661 inch
Height	28.7 mm	Height (inches)	1.1299 inch
Height of lowest version	26.2 mm	Width	12.7 mm
Width (inches)	0.5 inch	Net weight	3.5 g

Environmental Product Compliance

RoHS Compliance Status	Compliant without exemption
REACH SVHC	No SVHC above 0.1 wt%

System specifications

Product family	OMNIMATE Signal - series BL/SL 5.08	Type of connection	Board connection
Mounting onto the PCB	THT solder connection	Pitch in mm (P)	5.08 mm
Pitch in inches (P)	0.200 "	Outgoing elbow	90°
Number of poles	4	Number of solder pins per pole	1
Solder pin length (l)	3.2 mm	Solder pin length tolerance	+0.1 / -0.3 mm
Solder pin dimensions	d = 1.2 mm, Octagonal	Solder pin dimensions = d tolerance	0 / -0,03 mm
Solder eyelet hole diameter (D)	1.3 mm	Solder eyelet hole diameter tolerance (D)	+ 0,1 mm
L1 in mm	5.08 mm	L1 in inches	0.200 "
Number of rows	2	Pin series quantity	2
Touch-safe protection acc. to DIN VDE 57 106	finger-safe unplugged/ back-of-hand-safe plugged	Touch-safe protection acc. to DIN VDE 0470	IP20 plugged/ IP10 unplugged
Protection degree	IP20	Volume resistance	≤5 mΩ
Can be coded	Yes	Plugging cycles	25

Material data

Insulating material	PBT	Colour	orange
Colour chart (similar)	RAL 2000	Insulating material group	IIIa
Comparative Tracking Index (CTI)	≥ 200	Moisture Level (MSL)	
UL 94 flammability rating	V-0	Contact material	Cu-alloy
Contact surface	tinned	Layer structure of solder connection	1...3 µm Ni / 2...4 µm Sn matt
Layer structure of plug contact	1...3 µm Ni / 2...4 µm Sn matt	Storage temperature, min.	-40 °C
Storage temperature, max.	70 °C	Operating temperature, min.	-50 °C
Operating temperature, max.	100 °C	Temperature range, installation, min.	-25 °C
Temperature range, installation, max.	100 °C		

SLD 5.08V/04/90B 3.2 SN OR BX

Weidmüller Interface GmbH & Co. KG
Klingenbergstraße 26
D-32758 Detmold
Germany

www.weidmueller.com

Technical data

Rated data acc. to IEC

tested acc. to standard	IEC 60664-1, IEC 61984	Rated current, min. number of poles (Tu=20°C)	17 A
Rated current, max. number of poles (Tu=20°C)	11 A	Rated current, min. number of poles (Tu=40°C)	9.5 A
Rated voltage for surge voltage class / pollution degree II/2	320 V	Rated voltage for surge voltage class / pollution degree III/2	250 V
Rated voltage for surge voltage class / pollution degree III/3	250 V	Rated impulse voltage for surge voltage class/ pollution degree II/2	400 V
Rated impulse voltage for surge voltage class/ pollution degree III/2	4 kV	Rated impulse voltage for surge voltage class/ contamination degree III/3	4 kV

Rated data acc. to CSA

Institute (CSA)	CSA	Certificate No. (CSA)	200039-1121690
Rated voltage (Use group B / CSA)	300 V	Rated voltage (Use group D / CSA)	300 V
Rated current (Use group B / CSA)	10 A	Rated current (Use group D / CSA)	10 A
Reference to approval values	Specifications are maximum values, details - see approval certificate.		

Rated data acc. to UL 1059

Institute (UR)	UR	Certificate No. (UR)	E60693
Rated voltage (Use group B / UL 1059)	300 V	Rated voltage (Use group D / UL 1059)	300 V
Rated current (Use group B / UL 1059)	10 A	Rated current (Use group D / UL 1059)	10 A
Reference to approval values	Specifications are maximum values, details - see approval certificate.		

Packing

Packaging	Box	VPE length	168.00 mm
VPE width	95.00 mm	VPE height	39.00 mm

Important note

IPC conformity	Conformity: The products are developed, manufactured and delivered according international recognized standards and norms and comply with the assured properties in the data sheet resp. fulfill decorative properties in accordance with IPC-A-610 "Class 2". Further claims on the products can be evaluated on request.
Notes	• Additional variants on request • Rated current related to rated cross-section & min. No. of poles. • Spacing between rows: see hole layout • P on drawing = pitch • Rated data refer only to the component itself. Clearance and creepage distances to other components are to be designed in accordance with the relevant application standards. • In accordance with IEC 61984, OMNIMATE-connectors are connectors without breaking capacity (COC). During designated use, connectors are not allowed to be engaged or disengaged when live or under load • Long term storage of the product with average temperature of 50 °C and maximum humidity 70%, 36 months

Classifications

ETIM 8.0	EC002637	ETIM 9.0	EC002637
ETIM 10.0	EC002637	ECLASS 14.0	27-46-02-01
ECLASS 15.0	27-46-02-01		

SLD 5.08V/04/90B 3.2 SN OR BX

Weidmüller Interface GmbH & Co. KG
Klingenbergstraße 26
D-32758 Detmold
Germany

www.weidmueller.com

Drawings

Product image

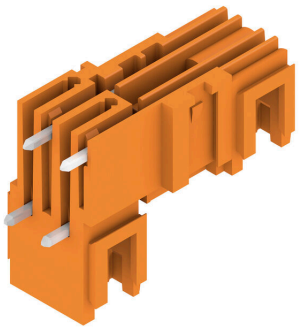

Dimensional drawing

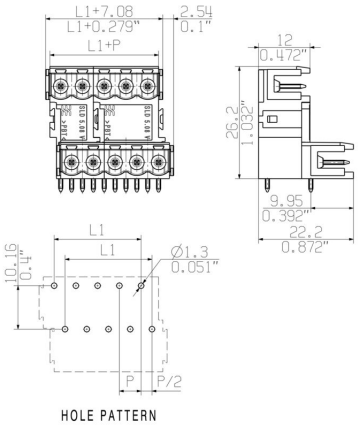

SLD 5.08V/04/90B 3.2 SN OR BX

Weidmüller Interface GmbH & Co. KG
Klingenbergstraße 26
D-32758 Detmold
Germany

www.weidmueller.com

Accessories

Blocks for PCB mounting

Minor component, major effect:
Clip-on attachment elements increase the mechanical resilience of the whole plug connection by
- securing the male connectors to the circuit board
- providing a vibration-proof connection between the sockets and the male connectors

Clip-on or pre-assembled - always the right solution:
- Hard-wearing, precise fitting dovetail joint
- Hard-wearing metal threaded inserts
- Suitable for all outlet directions

Maximum stability, minimum effort:
- Extremely resilient for frequent fastening operations
- Complete set for easy selection

The result: soldering points, contacts and overall module are more resilient against mechanical stress such as vibrations and tensile loads.

General ordering data

Type	SLA BB12R SW	Version
Order No.	1626880000	PCB plug-in connector, Accessories, Mounting block, black, Number
GTIN (EAN)	4008190198213	of poles: 0
Qty.	100 ST	
Type	SLA BB11R SW	Version
Order No.	1692340000	PCB plug-in connector, Accessories, Mounting block, black, Number
GTIN (EAN)	4008190864965	of poles: 0
Qty.	20 ST	
Type	SLA BB1R OR	Version
Order No.	1723430000	PCB plug-in connector, Accessories, Mounting block, orange, Number
GTIN (EAN)	4008190365981	of poles: 0
Qty.	20 ST	
Type	SLA BB2R OR	Version
Order No.	1723440000	PCB plug-in connector, Accessories, Mounting block, orange, Number
GTIN (EAN)	4008190365998	of poles: 0
Qty.	20 ST	
Type	SLA BB5R OR	Version
Order No.	1723460000	PCB plug-in connector, Accessories, Mounting block, orange, Number
GTIN (EAN)	4008190366018	of poles: 0
Qty.	20 ST	
Type	SLA BB6R OR	Version
Order No.	1723470000	PCB plug-in connector, Accessories, Mounting block, orange, Number
GTIN (EAN)	4008190366025	of poles: 0
Qty.	20 ST	
Type	SLA BB1R SW	Version
Order No.	1723480000	PCB plug-in connector, Accessories, Mounting block, black, Number
GTIN (EAN)	4008190366032	of poles: 0
Qty.	20 ST	
Type	SLA BB2R SW	Version
Order No.	1723490000	PCB plug-in connector, Accessories, Mounting block, black, Number
GTIN (EAN)	4008190366049	of poles: 0
Qty.	20 ST	
Type	SLA BB5R SW	Version
Order No.	1723510000	PCB plug-in connector, Accessories, Mounting block, black, Number
GTIN (EAN)	4008190366063	of poles: 0
Qty.	20 ST	

SLD 5.08V/04/90B 3.2 SN OR BX

Weidmüller Interface GmbH & Co. KG
Klingenbergstraße 26
D-32758 Detmold
Germany

www.weidmueller.com

Accessories

Type	SLA BB6R SW	Version
Order No.	1723520000	PCB plug-in connector, Accessories, Mounting block, black, Number
GTIN (EAN)	4008190366070	of poles: 0
Qty.	20 ST	

Additional accessories

No task is too small when creating the perfect solution. Connections form just one part of the overall process. Small details are often the key to the perfect solution in applications where potentials are tested, grouped or even isolated.
A system is not a system without small but useful details:

- Test plugs - ensure reliable pick-up from diagnostic sockets
- Cross-connectors - ensure a stable electrical distribution contact directly at the connection
- Compartment partition elements - divide a large number of male connectors into several separate socket connector channels
- Locks and clips - optional vibration-resistant clip-on connection or mounting for male and female connectors

In tandem with the manufacturing process and application - more accessories = smaller workload

General ordering data

Type	SL AT SW	Version
Order No.	1770240000	PCB plug-in connector, Accessories, Spacer, black, Number of poles: 1
GTIN (EAN)	4032248117710	
Qty.	100 ST	

Coding elements

Only connects what is supposed to be connected: the right connection at the right place.
Coding elements and locking devices clearly assign connecting elements during the manufacturing process and operation
The coding elements and locking devices are inserted prior to assembly or during the cable assembly phase.
The Weidmüller alternative: configure online using the variant configurator to precode prior to delivery.
Incorrect assembly on the circuit board and incorrect plugging of connecting elements is no longer possible.
The advantage: no troubleshooting during manufacture and no operational errors by the user.

General ordering data

Type	BLZ/SL KO BK BX	Version
Order No.	1545710000	PCB plug-in connector, Accessories, Coding element, black, Number
GTIN (EAN)	4008190087142	of poles: 1
Qty.	50 ST	

SLD 5.08V/04/90B 3.2 SN OR BX

Weidmüller Interface GmbH & Co. KG
Klingenbergstraße 26
D-32758 Detmold
Germany

www.weidmueller.com

Accessories

Type	BLZ/SL KO OR BX	Version
Order No.	1573010000	PCB plug-in connector, Accessories, Coding element, orange, Number
GTIN (EAN)	4008190048396	of poles: 1
Qty.	100 ST	

Blocks for PCB mounting

Minor component, major effect:
Clip-on attachment elements increase the mechanical resilience of the whole plug connection by
- securing the male connectors to the circuit board
- providing a vibration-proof connection between the sockets and the male connectors

Clip-on or pre-assembled - always the right solution:
- Hard-wearing, precise fitting dovetail joint
- Hard-wearing metal threaded inserts
- Suitable for all outlet directions

Maximum stability, minimum effort:
- Extremely resilient for frequent fastening operations
- Complete set for easy selection

The result: soldering points, contacts and overall module are more resilient against mechanical stress such as vibrations and tensile loads.

General ordering data

Type	SLA BB12R OR	Version
Order No.	1593450000	PCB plug-in connector, Accessories, Mounting block, orange, Number
GTIN (EAN)	4008190122164	of poles: 0
Qty.	100 ST	

Additional accessories

No task is too small when creating the perfect solution. Connections form just one part of the overall process. Small details are often the key to the perfect solution in applications where potentials are tested, grouped or even isolated.
A system is not a system without small but useful details:
- Test plugs - ensure reliable pick-up from diagnostic sockets
- Cross-connectors - ensure a stable electrical distribution contact directly at the connection
- Compartment partition elements - divide a large number of male connectors into several separate socket connector channels
- Locks and clips - optional vibration-resistant clip-on connection or mounting for male and female connectors

In tandem with the manufacturing process and application - more accessories = smaller workload

SLD 5.08V/04/90B 3.2 SN OR BX

Weidmüller Interface GmbH & Co. KG
Klingenbergstraße 26
D-32758 Detmold
Germany

www.weidmueller.com

Accessories

General ordering data

Type	SL AT OR	Version
Order No.	1598300000	PCB plug-in connector, Accessories, Spacer, orange, Number of poles:
GTIN (EAN)	4008190189266	1
Qty.	100 ST	

Blocks for PCB mounting

Minor component, major effect:
Clip-on attachment elements increase the mechanical resilience of the whole plug connection by
- securing the male connectors to the circuit board
- providing a vibration-proof connection between the sockets and the male connectors

Clip-on or pre-assembled - always the right solution:
- Hard-wearing, precise fitting dovetail joint
- Hard-wearing metal threaded inserts
- Suitable for all outlet directions

Maximum stability, minimum effort:
- Extremely resilient for frequent fastening operations
- Complete set for easy selection

The result: soldering points, contacts and overall module are more resilient against mechanical stress such as vibrations and tensile loads.

General ordering data

Type	SLA BB11R OR	Version
Order No.	1604120000	PCB plug-in connector, Accessories, Mounting block, orange, Number
GTIN (EAN)	4008190182977	of poles: 0
Qty.	20 ST	