Data sheet

LL 9.52/03/90 5.0SN BK BX

Weidmüller Interface GmbH & Co. KG
Klingenbergstraße 26
D-32758 Detmold
Germany

www.weidmueller.com

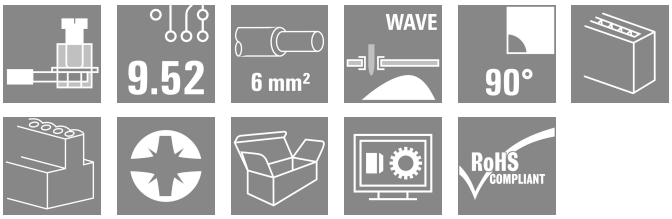

This PCB terminal provides connections for 1000 V, 6 mm² conductor cross-section and 32 A with proven clamping yoke connection at 9.52 mm pitch, conductor outlet direction in 90° design.

General ordering data

Version	Printed circuit board terminals, 9.52 mm, Number of poles: 3, 90°, Solder pin length (l): 5 mm, tinned, black, Clamping yoke connection, Clamping range, max. : 6 mm², Box
Order No.	1724710000
Type	LL 9.52/03/90 5.0SN BK BX
GTIN (EAN)	4008190959807
Qty.	100 items
Product data	IEC: 1000 V / 32 A / 0.18 - 6 mm² UL: 300 V / 30 A / AWG 26 - AWG 10
Packaging	Box

LL 9.52/03/90 5.0SN BK BX

Weidmüller Interface GmbH & Co. KG
Klingenbergstraße 26
D-32758 Detmold
Germany

www.weidmueller.com

Technical data

Approvals

Approvals	
ROHS	Conform
UL File Number Search	UL Website
Certificate No. (cURus)	E60693

Dimensions and weights

Depth	12.5 mm	Depth (inches)	0.4921 inch
Height	26.5 mm	Height (inches)	1.0433 inch
Height of lowest version	21.5 mm	Width	29.16 mm
Width (inches)	1.148 inch	Net weight	9.03 g

Environmental Product Compliance

RoHS Compliance Status	Compliant without exemption
REACH SVHC	No SVHC above 0.1 wt%

System parameters

Product family	OMNIMATE Signal - series LL	Wire connection method	Clamping yoke connection
Property, clamping point	WireReady	Mounting onto the PCB	THT solder connection
Conductor outlet direction	90°	Pitch in mm (P)	9.52 mm
Pitch in inches (P)	0.375 "	Number of poles	3
Pin series quantity	1	Fitted by customer	Yes
Number of rows	1	Max. adjacent poles per row	12
Solder pin length (l)	5 mm	Solder pin dimensions	0.5 x 1.0 mm
Solder eyelet hole diameter (D)	1.3 mm	Solder eyelet hole diameter tolerance (D)	+ 0,1 mm
Number of solder pins per pole	1	Screwdriver blade	0.8 x 4.0
Screwdriver blade standard	DIN 5264	Tightening torque, min.	0.5 Nm
Tightening torque, max.	0.6 Nm	Clamping screw	M 3
Stripping length	7 mm	L1 in mm	19.04 mm
L1 in inches	0.750 "	Touch-safe protection acc. to DIN VDE 0470	IP 20
Touch-safe protection acc. to DIN VDE 57 106	Safe from finger touch	Protection degree	IP20

Material data

Insulating material	Wemid (PA)	Colour	black
Colour chart (similar)	RAL 9011	Insulating material group	I
Comparative Tracking Index (CTI)	≥ 600	Moisture Level (MSL)	
UL 94 flammability rating	V-0	Contact material	Cu-alloy
Contact surface	tinned	Coating	4-6 µm SN
Tinning type	matt	Layer structure of solder connection	2...4 µm Ni / 4...6 µm Sn matt
Storage temperature, min.	-40 °C	Storage temperature, max.	70 °C
Operating temperature, min.	-50 °C	Operating temperature, max.	120 °C
Temperature range, installation, min.	-25 °C	Temperature range, installation, max.	120 °C

LL 9.52/03/90 5.0SN BK BX

Weidmüller Interface GmbH & Co. KG
Klingenbergstraße 26
D-32758 Detmold
Germany

www.weidmueller.com

Technical data

Conductors suitable for connection

Clamping range, min.	0.18 mm²
Clamping range, max.	6 mm²
Wire connection cross section AWG, min.	AWG 26
Wire connection cross section AWG, max.	AWG 10
Solid, min. H05(07) V-U	0.18 mm²
Solid, max. H05(07) V-U	6 mm²
Stranded, min. H07V-R	0.22 mm²
Flexible, min. H05(07) V-K	0.22 mm²
Flexible, max. H05(07) V-K	4 mm²
w. plastic collar ferrule, DIN 46228 pt 4, min.	0.5 mm²
w. plastic collar ferrule, DIN 46228 pt 4, max.	2.5 mm²
w. wire end ferrule, DIN 46228 pt 1, min.	0.5 mm²
w. wire end ferrule, DIN 46228 pt 1, max.	4 mm²
Plug gauge in accordance with EN 60999 a x b; ø	3.6 mm x 3.1 mm; 2.7 mm

Clampable conductor	Cross-section for conductor connection	Type	fine-wired	
		nominal	0.5 mm²	
	wire end ferrule	Stripping length	nominal	6 mm
		Recommended wire-end ferrule	H0,5/6	
	Cross-section for conductor connection	Type	fine-wired	
		nominal	1 mm²	
	wire end ferrule	Stripping length	nominal	6 mm
		Recommended wire-end ferrule	H1,0/6	
	Cross-section for conductor connection	Type	fine-wired	
		nominal	1.5 mm²	
	wire end ferrule	Stripping length	nominal	7 mm
		Recommended wire-end ferrule	H1,5/7	
	Cross-section for conductor connection	Type	fine-wired	
		nominal	2.5 mm²	
	wire end ferrule	Stripping length	nominal	7 mm
		Recommended wire-end ferrule	H2,5/7	
	Cross-section for conductor connection	Type	fine-wired	
		nominal	0.75 mm²	
	wire end ferrule	Stripping length	nominal	6 mm
		Recommended wire-end ferrule	H0,75/6	
Reference text	Length of ferrules is to be chosen depending on the product and the rated voltage., The outside diameter of the plastic collar should not be larger than the pitch (P)			

Rated data acc. to IEC

tested acc. to standard	IEC 60664-1, IEC 61984	Rated current, min. number of poles (Tu=20°C)	32 A
Rated current, max. number of poles (Tu=20°C)	32 A	Rated current, min. number of poles (Tu=40°C)	32 A

LL 9.52/03/90 5.0SN BK BX

Weidmüller Interface GmbH & Co. KG
Klingenbergstraße 26
D-32758 Detmold
Germany

www.weidmueller.com

Technical data

Rated current, max. number of poles (Tu=40°C)	32 A	Rated voltage for surge voltage class / pollution degree II/2	1000 V
Rated voltage for surge voltage class / pollution degree III/2	1000 V	Rated voltage for surge voltage class / pollution degree III/3	690 V
Rated impulse voltage for surge voltage class/ pollution degree II/2	6 kV	Rated impulse voltage for surge voltage class/ pollution degree III/2	8 kV
Rated impulse voltage for surge voltage class/ contamination degree III/3	8 kV	Short-time withstand current resistance	3 x 1s with 120 A

Rated data acc. to CSA

Institute (CSA)	CSA	Certificate No. (CSA)	200039-1815154
Rated voltage (Use group B / CSA)	300 V	Rated voltage (Use group C / CSA)	300 V
Rated current (Use group B / CSA)	30 A	Rated current (Use group C / CSA)	35 A
Wire cross-section, AWG, min.	AWG 26	Wire cross-section, AWG, max.	AWG 10
Reference to approval values	Specifications are maximum values, details - see approval certificate.		

Rated data acc. to UL 1059

Institute (cURus)	CURUS	Certificate No. (cURus)	E60693
Rated voltage (Use group B / UL 1059)	300 V	Rated voltage (Use group C / UL 1059)	300 V
Rated current (Use group B / UL 1059)	30 A	Rated current (Use group C / UL 1059)	30 A
Wire cross-section, AWG, min.	AWG 26	Wire cross-section, AWG, max.	AWG 10
Reference to approval values	Specifications are maximum values, details - see approval certificate.		

Packing

Packaging	Box	VPE length	47.00 mm
VPE width	134.00 mm	VPE height	313.00 mm

Type tests

Test: Durability of markings	Test	mark of origin, type identification, pitch, type of material, approval marking UL, approval marking CSA, durability	
	Evaluation	available	
Test: Clampable cross section	Standard	DIN EN 60999-1 section 7 and 9.1 / 12.00, DIN EN 60947-1 section 8.2.4.5.1 / 12.02	
	Conductor type	Type of conductor and conductor cross-section	solid 0,18 mm²
		Type of conductor and conductor cross-section	flexible 0,22 mm²
		Type of conductor and conductor cross-section	flexible 4 mm²
		Type of conductor and conductor cross-section	solid 6 mm²
		Type of conductor and conductor cross-section	AWG 26/1
		Type of conductor and conductor cross-section	AWG 26/19

LL 9.52/03/90 5.0SN BK BX

Weidmüller Interface GmbH & Co. KG
Klingenbergstraße 26
D-32758 Detmold
Germany

www.weidmueller.com

Technical data

		Type of conductor and conductor cross-section	AWG 10/1
		Type of conductor and conductor cross-section	AWG 10/19
	Evaluation	passed	
Test for damage to and accidental loosening of conductors	Standard	DIN EN 60999-1 section 9.4 / 12.00	
	Requirement	0.2 kg	
	Conductor type	Type of conductor and conductor cross-section	stranded 0.25 mm²
		Type of conductor and conductor cross-section	AWG 26/1
		Type of conductor and conductor cross-section	AWG 26/19
	Evaluation	passed	
	Requirement	0.3 kg	
	Conductor type	Type of conductor and conductor cross-section	solid 0.5 mm²
	Evaluation	passed	
	Requirement	1.4 kg	
	Conductor type	Type of conductor and conductor cross-section	solid 6 mm²
		Type of conductor and conductor cross-section	AWG 10/1
	Evaluation	passed	
	Requirement	0,9 kg	
	Conductor type	Type of conductor and conductor cross-section	flexible 4 mm²
	Evaluation	passed	
Pull-out test	Standard	DIN EN 60999-1 section 9.5 / 12.00	
	Requirement	≥10 N	
	Conductor type	Type of conductor and conductor cross-section	AWG 26/1
		Type of conductor and conductor cross-section	AWG 26/19
	Evaluation	passed	
	Requirement	≥20 N	
	Conductor type	Type of conductor and conductor cross-section	H05V-K0.5
		Type of conductor and conductor cross-section	H05V-U0.5
	Evaluation	passed	
	Requirement	≥60 N	
	Conductor type	Type of conductor and conductor cross-section	H07V-K4
	Evaluation	passed	
	Requirement	≥80 N	
	Conductor type	Type of conductor and conductor cross-section	H07V-U6

Weidmüller Interface GmbH & Co. KG
Klingenbergstraße 26
D-32758 Detmold
Germany

www.weidmueller.com

Technical data

		Type of conductor and conductor cross-section	AWG 10/1
	Evaluation	passed	

Important note

IPC conformity	Conformity: The products are developed, manufactured and delivered according international recognized standards and norms and comply with the assured properties in the data sheet resp. fulfill decorative properties in accordance with IPC-A-610 "Class 2". Further claims on the products can be evaluated on request.
Notes	• Rated current related to rated cross-section & min. No. of poles. • Wire end ferrule without plastic collar to DIN 46228/1 • Wire end ferrule with plastic collar to DIN 46228/4 • The data given under CSA relates to a cUL approval - E60693 • P on drawing = pitch • Rated data refer only to the component itself. Clearance and creepage distances to other components are to be designed in accordance with the relevant application standards. • Long term storage of the product with average temperature of 50 °C and maximum humidity 70%, 36 months

Classifications

ETIM 8.0	EC002643	ETIM 9.0	EC002643
ETIM 10.0	EC002643	ECLASS 14.0	27-46-01-01
ECLASS 15.0	27-46-01-01		

LL 9.52/03/90 5.0SN BK BX

Weidmüller Interface GmbH & Co. KG
Klingenbergstraße 26
D-32758 Detmold
Germany

www.weidmueller.com

Drawings

Product image

Dimensional drawing

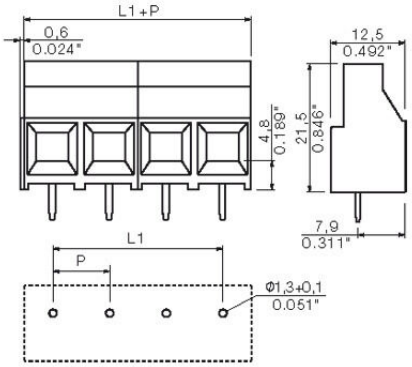

Graph

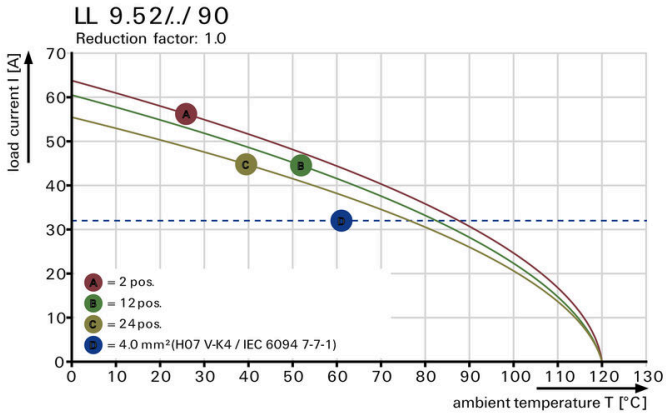

LL 9.52/03/90 5.0SN BK BX

Weidmüller Interface GmbH & Co. KG
Klingenbergstraße 26
D-32758 Detmold
Germany

www.weidmueller.com

Accessories

Crosshead screwdriver Pozidriv

VDE insulated crosshead screwdriver type Pozidriv SDIK PZ DIN 7438, ISO 8764/2-PZ, output to ISO 8764-PZ, SoftFinish grip

General ordering data

Type	SDIK PZ1 X 80	Version
Order No.	2749920000	Screwdriver, Blade width (B): 1 mm, 80 mm, Blade thickness (A): 1
GTIN (EAN)	4050118897227	
Qty.	1 ST	
Type	SDK PZ1 X 80	Version
Order No.	2749440000	Screwdriver, Blade width (B): 14.5 mm, 80 mm, Blade thickness (A): 1
GTIN (EAN)	4050118895667	
Qty.	1 ST	

Slotted screwdriver

VDE insulated slot-head screwdriver, SDI DIN 7437, ISO 2380/2, drive output acc. to DIN 5264, ISO 2380/1. SoftFinish grip

General ordering data

Type	SDIS 0.8X4.0X100	Version
Order No.	9008400000	Screwdriver, Screwdriver
GTIN (EAN)	4032248056361	
Qty.	1 ST	
Type	SDS 0.8X4.0X100	Version
Order No.	9008340000	Screwdriver, Screwdriver
GTIN (EAN)	4032248056293	
Qty.	1 ST	