Data sheet

ZDUB 2.5-2/4AN/RC

Weidmüller Interface GmbH & Co. KG
Klingenbergstraße 26
D-32758 Detmold
Germany

www.weidmueller.com

Product image

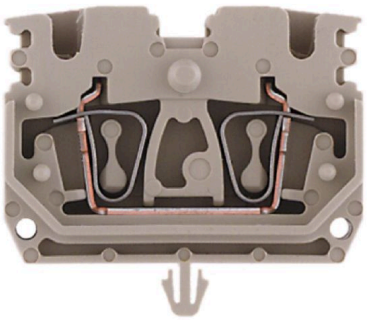

ZDUB 4

Thanks to their compact design, Mini rail-mounted terminal blocks are ideal for working in confined spaces such as small housings and terminal boxes.

General ordering data

Version	Z-series, Feed-through terminal, Rated cross-section: 2.5 mm², Tension-clamp connection, dark beige, Direct mounting
Order No.	1712970000
Type	ZDUB 2.5-2/4AN/RC
GTIN (EAN)	4008190378813
Qty.	100 items

ZDUB 2.5-2/4AN/RC

Weidmüller Interface GmbH & Co. KG
Klingenbergstraße 26
D-32758 Detmold
Germany

www.weidmueller.com

Technical data

Approvals

Approvals	
ROHS	Conform
UL File Number Search	UL Website
Certificate No. (cURus)	E60693
Certificate No. (cURusEX)	E184763

Dimensions and weights

Depth	29 mm	Depth (inches)	1.1417 inch
Height	33.5 mm	Height (inches)	1.3189 inch
Width	10.2 mm	Width (inches)	0.4016 inch
Net weight	7.11 g		

Temperatures

Storage temperature	-25 °C...55 °C	Ambient temperature	-5 °C...40 °C
Continuous operating temp., min.	-50 °C	Continuous operating temp., max.	120 °C

Environmental Product Compliance

RoHS Compliance Status	Compliant without exemption	
REACH SVHC	No SVHC above 0.1 wt%	
Product Carbon Footprint	Cradle to gate	0.095 kg CO2 eq.

Material data

Basic material	Wemid	Colour	dark beige
UL 94 flammability rating	V-0		

Rating data IECEx/ATEX

Certificate No. (ATEX)	DEMKO16ATEX1808U	Certificate No. (IECEX)	IECEXULD16.0036U
Max. voltage (ATEX)	550 V	Current (ATEX)	21 A
Wire cross section max. (ATEX)	2.5 mm²	Max. voltage (IECEX)	550 V
Current (IECEX)	21 A	Wire cross section max. (IECEX)	2.5 mm²
Marking EN 60079-7	Ex eb II C Gb	Ex 2014/34/EU label	II 2 G D

System specifications

Version	Tension-clamp connection, can only be bridged at the clamping point, One end without connector	End cover plate required	Yes
Number of potentials	1	Number of levels	1
Number of clamping points per level	4	Number of potentials per tier	1
Levels cross-connected internally	Yes	PE connection	No
Mounting rail	TS 35	N-function	No
PE function	No	PEN function	No

ZDUB 2.5-2/4AN/RC

Weidmüller Interface GmbH & Co. KG
Klingenbergstraße 26
D-32758 Detmold
Germany

www.weidmueller.com

Technical data

Additional technical data

Open sides	right	Installation advice	Direct mounting
Explosion-tested version	Yes	Type of mounting	Direct mounting

CSA rating data

Wire cross section max. (CSA)	12 AWG	Voltage size C (CSA)	600 V
Current size C (CSA)	25 A	Certificate No. (CSA)	12400-379
Wire cross section min. (CSA)	26 AWG		

Conductors for clamping (additional connection)

Connection type, additional connection	Tension-clamp connection

Conductors for clamping (rated connection)

Gauge to IEC 60947-1	A2		
Wire connection cross section AWG, max.	AWG 12		
Connection direction	top		
Stripping length	10 mm		
Type of connection	Tension-clamp connection		
Number of connections	4		
Clamping range, max.	4 mm²		
Clamping range, min.	0.13 mm²		
Blade size	0.6 x 3.5 mm		
Wire connection cross section AWG, min.	AWG 26		
Wire connection cross-section, finely stranded with wire-end ferrules DIN 46228/4, max.	1.5 mm²		
Wire connection cross-section, finely stranded with wire-end ferrules DIN 46228/4, min.	0.13 mm²		
Wire connection cross-section, finely stranded with wire-end ferrules DIN 46228/1, max.	1.5 mm²		
Wire connection cross-section, finely stranded with wire-end ferrules DIN 46228/1, min.	0.13 mm²		
Wire connection cross section, finely stranded, max.	2.5 mm²		
Wire connection cross section, finely stranded, min.	0.13 mm²		
Connection cross-section, stranded, max.	4 mm²		
Connection cross-section, stranded, min.	0.13 mm²		
Wire connection cross-section, solid core, max.	4 mm²		
Wire connection cross-section, solid core, min.	0.13 mm²		
Connection cross-section, finely stranded, min.	0.13 mm²		
Tube length for wire-end ferrule with plastic collar DIN 46228/4	Tube length	min.	6 mm
		max.	10 mm
	Cross-section for conductor connection	nominal	0.5 mm²
	Tube length	min.	6 mm
		max.	10 mm
	Cross-section for conductor connection	nominal	0.75 mm²

Weidmüller Interface GmbH & Co. KG
Klingenbergstraße 26
D-32758 Detmold
Germany

www.weidmueller.com

Technical data

	Tube length	min.	6 mm
		max.	10 mm
	Cross-section for conductor connection	nominal	1 mm²
	Tube length	min.	8 mm
		max.	10 mm
	Cross-section for conductor connection	nominal	1.5 mm²
	Tube length	nominal	8 mm
	Cross-section for conductor connection	nominal	2.5 mm²
Tube length for wire-end ferrule without plastic collar DIN 46228/1	Tube length	nominal	10 mm
	Cross-section for conductor connection	nominal	0.5 mm²
	Tube length	nominal	10 mm
	Cross-section for conductor connection	nominal	0.75 mm²
	Tube length	nominal	10 mm
	Cross-section for conductor connection	nominal	1.5 mm²
	Tube length	nominal	10 mm
	Cross-section for conductor connection	nominal	2.5 mm²

Dimensions

TS 15 offset	17 mm

General

Wire connection cross section AWG, max.	AWG 12	Installation advice	Direct mounting
Wire connection cross section AWG, min.	AWG 26	Standards	IEC 60947-7-1
Mounting rail	TS 35		

Rating data

Rated cross-section	2.5 mm²	Rated voltage	800 V
Rated DC voltage	800 V	Nominal current	24 A
Current at maximum wires	30 A	Standards	IEC 60947-7-1
Volume resistance according to IEC 60947-7-x	1.33 mΩ	Rated impulse withstand voltage	8 kV
Power loss in accordance with IEC 60947-7-x	0.77 W	Pollution severity	3

UL rating data

Conductor size Factory wiring max. (cURus)	12 AWG	Certificate No. (cURus)	E60693
Conductor size Field wiring min. (cURus)	26 AWG	Conductor size Factory wiring min. (cURus)	26 AWG
Voltage size C (cURus)	600 V	Current size C (cURus)	20 A
Conductor size Field wiring max. (cURus)	12 AWG		

Classifications

ETIM 8.0	EC000897	ETIM 9.0	EC000897
ETIM 10.0	EC000897	ECLASS 14.0	27-25-01-01
ECLASS 15.0	27-25-01-01		

ZDUB 2.5-2/4AN/RC

Weidmüller Interface GmbH & Co. KG
Klingenbergstraße 26
D-32758 Detmold
Germany

www.weidmueller.com

Drawings

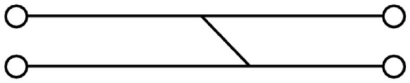

Drilling template

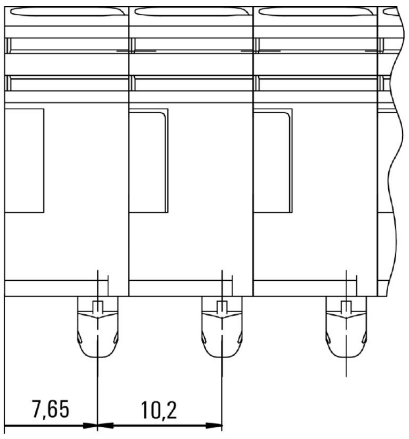

ZDUB 2.5-2/4AN