Data sheet

HDC 24B TOBU 1PG21G

Weidmüller Interface GmbH & Co. KG
Klingenbergstraße 26
D-32758 Detmold
Germany

www.weidmueller.com

IP65

The special die-cast alloy and the multi-layered surface sealing provide complete protection for the HDC housings.
The cleverly designed interlock system is manufactured from stainless steel. This guarantees a long lifespan with high resistance to corrosion and impact.
The housing interlock system provides integrated safety. Our unique, patented spring system provides the housing interlock with a secure grip and prevents accidental opening.
The laser marking allows for easy and quick identification. Each housing is permanently labelled with a laser marking so that each product can be quickly designated and positioned.
Weidmüller RockStar® IP 65 / NEMA Type 4X housings - your first choice for industrial housings with IP 65 protection.

General ordering data

Version	HDC enclosures, Installation size: 8, Protection degree: IP65, in plugged condition, Cable entry from top, Plug housing, Side-locking clamp on lower side, Standard, Size of cable entries: PG 21
Order No.	1661370000
Type	HDC 24B TOBU 1PG21G
GTIN (EAN)	4008190417925
Qty.	1 items

HDC 24B TOBU 1PG21G

Weidmüller Interface GmbH & Co. KG
Klingenbergstraße 26
D-32758 Detmold
Germany

www.weidmueller.com

Technical data

Approvals

Approvals	
ROHS	Conform
UL File Number Search	UL Website
Certificate No. (cURus)	E92202

Dimensions and weights

Height	63 mm	Height (inches)	2.4803 inch
Width	59 mm	Width (inches)	2.3228 inch
Net weight	241.12 g		

Temperatures

Limit temperature	-40 °C ... 125 °C

Environmental Product Compliance

RoHS Compliance Status	Compliant without exemption	
REACH SVHC	No SVHC above 0.1 wt%	
Chemical resistance	Substance	Acetone
	Chemical resistance	Conditionally resistant
	Substance	Drilling oil
	Chemical resistance	Resistant
	Substance	Diesel
	Chemical resistance	Resistant
	Substance	Ethyl alcohol
	Chemical resistance	Resistant
	Substance	Transmission oil
	Chemical resistance	Resistant
	Substance	Hydraulic oil
	Chemical resistance	Resistant
	Substance	Coolant
	Chemical resistance	Resistant
	Substance	Petroleum benzine
	Chemical resistance	Resistant
	Substance	Sweat
	Chemical resistance	Resistant
	Substance	Premium gasoline
	Chemical resistance	Conditionally resistant
	Substance	Water
	Chemical resistance	Resistant
	Substance	UV
	Chemical resistance	Unstable
	Substance	Ozone
	Chemical resistance	Unstable

Dimensions

Cable entry	w. thread	Width housing C	43 mm
Total length housing	120 mm	Height of housing B	63 mm

HDC 24B TOBU 1PG21G

Weidmüller Interface GmbH & Co. KG
Klingenbergstraße 26
D-32758 Detmold
Germany

www.weidmueller.com

Technical data

General data

Housing main material	diecast aluminium	Surface finish	Powder coating
Protection degree	IP65, in plugged condition	EMC housings	No
Material of locking element	Stainless steel, rust-proof		

Version

Size of cable entries	PG 21	Top part/bottom part/lid	upper part
Cover	without cover	Number of cable entry on top	1
Number of cable entry sideways	0	Design of housing	Cable entry from top, Plug housing
Design of locking system	Side-locking clamp on lower side	Design	Standard
Installation size	8	Cable entry	w. thread
Type	Plug	Clamp version	Side-locking clamp
Sealing	no sealing	Internal thread	PG 21
Colour (RAL)	RAL 7035	BG	8
Suitable for ModuPlug®	No		

Classifications

ETIM 8.0	EC000437	ETIM 9.0	EC000437
ETIM 10.0	EC000437	ECLASS 14.0	27-44-02-02
ECLASS 15.0	27-44-02-02		

HDC 24B TOBU 1PG21G

Weidmüller Interface GmbH & Co. KG
Klingenbergstraße 26
D-32758 Detmold
Germany

www.weidmueller.com

Drawings

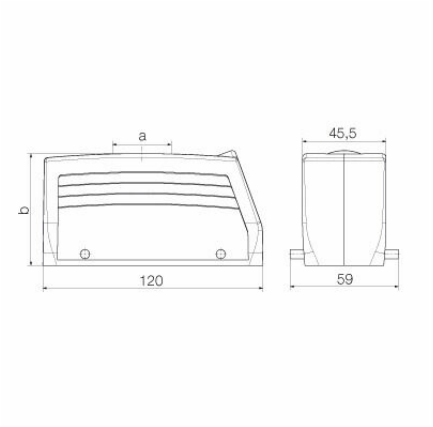

HDC 24B TOBU 1PG21G

Weidmüller Interface GmbH & Co. KG
Klingenbergstraße 26
D-32758 Detmold
Germany

www.weidmueller.com

Accessories

Cover

The special die-cast alloy and the multi-layered surface sealing provide complete protection for the HDC housings.
The cleverly designed interlock system is manufactured from stainless steel. This guarantees a long lifespan with high resistance to corrosion and impact.
The housing interlock system provides integrated safety. Our unique, patented spring system provides the housing interlock with a secure grip and prevents accidental opening.
The laser marking allows for easy and quick identification. Each housing is permanently labelled with a laser marking so that each product can be quickly designated and positioned.
Weidmüller RockStar® IP 65 / NEMA Type 4X housings - your first choice for industrial housings with IP 65 protection.

General ordering data

Type	HDC 24B DMDQ 2QB	Version
Order No.	1665640000	HDC enclosures, Installation size: 8, Protection degree: IP65, in
GTIN (EAN)	4008190422660	plugged condition, Cover for upper part of housing, Side-locking
Qty.	1 ST	clamp on lower side, Standard, Size of cable entries: none
Type	HDC 24B DMDQ 2QB N	Version
Order No.	2559760000	HDC enclosures, Installation size: 8, Protection degree: IP65, in
GTIN (EAN)	4050118676754	plugged condition, Cover for upper part of housing, Side-locking
Qty.	1 ST	clamp on lower side, Standard, Size of cable entries: none

HDC 24B TOBU 1PG21G

Weidmüller Interface GmbH & Co. KG
Klingenbergstraße 26
D-32758 Detmold
Germany

www.weidmueller.com

Counterpart

Bulkhead housing

The special die-cast alloy and the multi-layered surface sealing provide complete protection for the HDC housings.
The cleverly designed interlock system is manufactured from stainless steel. This guarantees a long lifespan with high resistance to corrosion and impact.
The housing interlock system provides integrated safety. Our unique, patented spring system provides the housing interlock with a secure grip and prevents accidental opening.
The laser marking allows for easy and quick identification. Each housing is permanently labelled with a laser marking so that each product can be quickly designated and positioned.
Weidmüller RockStar® IP 65 / NEMA Type 4X housings - your first choice for industrial housings with IP 65 protection.

General ordering data

Type	HDC 24B ABU	Version
Order No.	1212400000	HDC enclosures, Installation size: 8, Protection degree: IP65, in
GTIN (EAN)	4008190083939	plugged condition, Bulkhead housing, Side-locking clamp on lower
Qty.	1 ST	side, Side-locking clamp not replaceable, Standard, Size of cable
		entries: none
Type	HDC 24B ABU N	Version
Order No.	2488600000	HDC enclosures, Installation size: 8, Protection degree: IP65, in
GTIN (EAN)	4050118541533	plugged condition, Bulkhead housing, Side-locking clamp on lower
Qty.	1 ST	side, Standard, Size of cable entries: none

Coupling hood

The special die-cast alloy and the multi-layered surface sealing provide complete protection for the HDC housings.
The cleverly designed interlock system is manufactured from stainless steel. This guarantees a long lifespan with high resistance to corrosion and impact.
The housing interlock system provides integrated safety. Our unique, patented spring system provides the housing interlock with a secure grip and prevents accidental opening.
The laser marking allows for easy and quick identification. Each housing is permanently labelled with a laser marking so that each product can be quickly designated and positioned.
Weidmüller RockStar® IP 65 / NEMA Type 4X housings - your first choice for industrial housings with IP 65 protection.

General ordering data

Type	HDC 24B KBU 1M25G	Version
Order No.	1787920000	HDC enclosures, Installation size: 8, Protection degree: IP65, in
GTIN (EAN)	4032248205363	plugged condition, Coupling housing, Side-locking clamp on lower
Qty.	1 ST	side, Standard, Size of cable entries: M 25

HDC 24B TOBU 1PG21G

Weidmüller Interface GmbH & Co. KG
Klingenbergstraße 26
D-32758 Detmold
Germany

www.weidmueller.com

Counterpart

Type	HDC 24B KBU 1PG21G	Version
Order No.	1661720000	HDC enclosures, Installation size: 8, Protection degree: IP65, in
GTIN (EAN)	4008190418274	plugged condition, Coupling housing, Side-locking clamp on lower
Qty.	1 ST	side, Standard, Size of cable entries: PG 21
Type	HDC 24B KBU 1PG29G	Version
Order No.	1661730000	HDC enclosures, Installation size: 8, Protection degree: IP65, in
GTIN (EAN)	4008190418281	plugged condition, Coupling housing, Side-locking clamp on lower
Qty.	1 ST	side, Standard, Size of cable entries: PG 29
Type	HDC 64D KBU 1M32G	Version
Order No.	1786960000	HDC enclosures, Installation size: 8, Protection degree: IP65, in
GTIN (EAN)	4032248204205	plugged condition, Coupling housing, Side-locking clamp on lower
Qty.	1 ST	side, high, Size of cable entries: M 32
Type	HDC 64D KBU 1PG29G	Version
Order No.	1661810000	HDC enclosures, Installation size: 8, Protection degree: IP65, in
GTIN (EAN)	4008190418359	plugged condition, Coupling housing, Side-locking clamp on lower
Qty.	1 ST	side, high, Size of cable entries: PG 29

Base housing

The special die-cast alloy and the multi-layered surface sealing provide complete protection for the HDC housings.
The cleverly designed interlock system is manufactured from stainless steel. This guarantees a long lifespan with high resistance to corrosion and impact.
The housing interlock system provides integrated safety. Our unique, patented spring system provides the housing interlock with a secure grip and prevents accidental opening.
The laser marking allows for easy and quick identification. Each housing is permanently labelled with a laser marking so that each product can be quickly designated and positioned.
Weidmüller RockStar® IP 65 / NEMA Type 4X housings - your first choice for industrial housings with IP 65 protection.

General ordering data

Type	HDC 24B SBU 1M25G	Version
Order No.	1901150000	HDC enclosures, Installation size: 8, Protection degree: IP65, in
GTIN (EAN)	4032248521258	plugged condition, Base housing, Side-locking clamp on lower side,
Qty.	1 ST	Standard, Size of cable entries: M 25
Type	HDC 24B SBU 1M25G N	Version
Order No.	2560960000	HDC enclosures, Installation size: 8, Protection degree: IP65, in
GTIN (EAN)	4050118673227	plugged condition, Base housing, Side-locking clamp on lower side,
Qty.	1 ST	Standard, Size of cable entries: M 25
Type	HDC 24B SBU 1PG21G	Version
Order No.	1661510000	HDC enclosures, Installation size: 8, Protection degree: IP65, in
GTIN (EAN)	4008190418069	plugged condition, Base housing, Side-locking clamp on lower side,
Qty.	1 ST	Standard, Size of cable entries: PG 21
Type	HDC 24B SBU 1PG21G N	Version
Order No.	2560750000	HDC enclosures, Installation size: 8, Protection degree: IP65, in
GTIN (EAN)	4050118676747	plugged condition, Base housing, Side-locking clamp on lower side,
Qty.	1 ST	Standard, Size of cable entries: M 25

HDC 24B TOBU 1PG21G

Weidmüller Interface GmbH & Co. KG
Klingenbergstraße 26
D-32758 Detmold
Germany

www.weidmueller.com

Counterpart

Type	HDC 24B SBU 2M25G	Version
Order No.	1787870000	HDC enclosures, Installation size: 8, Protection degree: IP65, in
GTIN (EAN)	4032248205318	plugged condition, Base housing, Side-locking clamp on lower side,
Qty.	1 ST	Standard, Size of cable entries: M 25
Type	HDC 24B SBU 2PG21G	Version
Order No.	1661520000	HDC enclosures, Installation size: 8, Protection degree: IP65, in
GTIN (EAN)	4008190418076	plugged condition, Base housing, Side-locking clamp on lower side,
Qty.	1 ST	Standard, Size of cable entries: PG 21
Type	HDC 24B SBU 2M25G N	Version
Order No.	2560970000	HDC enclosures, Installation size: 8, Protection degree: IP65, in
GTIN (EAN)	4050118676730	plugged condition, Base housing, Side-locking clamp on lower side,
Qty.	1 ST	Standard, Size of cable entries: M 25
Type	HDC 64D SBU 1M25G	Version
Order No.	1904340000	HDC enclosures, Installation size: 8, Protection degree: IP65, in
GTIN (EAN)	4032248585601	plugged condition, Base housing, Side-locking clamp on lower side,
Qty.	1 ST	high, Size of cable entries: M 25
Type	HDC 64D SBU 1M32G	Version
Order No.	1904350000	HDC enclosures, Installation size: 8, Protection degree: IP65, in
GTIN (EAN)	4032248585298	plugged condition, Base housing, Side-locking clamp on lower side,
Qty.	1 ST	high, Size of cable entries: M 32
Type	HDC 64D SBU 1M32G N	Version
Order No.	2561050000	HDC enclosures, Installation size: 8, Protection degree: IP65, in
GTIN (EAN)	4050118680195	plugged condition, Base housing, Side-locking clamp on lower side,
Qty.	1 ST	high, Size of cable entries: M 32
Type	HDC 64D SBU 2M25G	Version
Order No.	1786890000	HDC enclosures, Installation size: 8, Protection degree: IP65, in
GTIN (EAN)	4032248204137	plugged condition, Base housing, Side-locking clamp on lower side,
Qty.	1 ST	high, Size of cable entries: M 25
Type	HDC 64D SBU 2M25G N	Version
Order No.	2561060000	HDC enclosures, Installation size: 8, Protection degree: IP65, in
GTIN (EAN)	4050118680508	plugged condition, Base housing, Side-locking clamp on lower side,
Qty.	1 ST	high, Size of cable entries: M 32
Type	HDC 64D SBU 2M32G	Version
Order No.	1786880000	HDC enclosures, Installation size: 8, Protection degree: IP65, in
GTIN (EAN)	4032248204120	plugged condition, Base housing, Side-locking clamp on lower side,
Qty.	1 ST	high, Size of cable entries: M 32
Type	HDC 64D SBU 2M32G N	Version
Order No.	2550540000	HDC enclosures, Installation size: 8, Protection degree: IP65, in
GTIN (EAN)	4064675005087	plugged condition, Base housing, Side-locking clamp on lower side,
Qty.	1 ST	high, Size of cable entries: M 32
Type	HDC 64D SBU 2PG21G	Version
Order No.	1661590000	HDC enclosures, Installation size: 8, Protection degree: IP65, in
GTIN (EAN)	4008190418144	plugged condition, Base housing, Side-locking clamp on lower side,
Qty.	1 ST	high, Size of cable entries: PG 21
Type	HDC 64D SBU 2PG29G	Version
Order No.	1661630000	HDC enclosures, Installation size: 8, Protection degree: IP65, in
GTIN (EAN)	4008190418182	plugged condition, Base housing, Side-locking clamp on lower side,
Qty.	1 ST	high, Size of cable entries: PG 29
Type	HDC 64D SBU 2PG29G N	Version
Order No.	2560790000	HDC enclosures, Installation size: 8, Protection degree: IP65, in
GTIN (EAN)	4050118894103	plugged condition, Base housing, Side-locking clamp on lower side,
Qty.	1 ST	high, Size of cable entries: M 32