Data sheet

HDC-C-HE-BM0.5AU

Weidmüller Interface GmbH & Co. KG
Klingenbergstraße 26
D-32758 Detmold
Germany

www.weidmueller.com

Crimps provide a electrical and mechanical connection between wire and contact that is both secure and reliable. The optimal crimp connection is gas-tight and corrosion-resistant.

General ordering data

Version	Heavy-duty connectors, Crimp contact, HE, HEE, HQ, MixMate, Female, Conductor cross-section, max.: 0.5, turned, Copper alloy
Order No.	1651470000
Type	HDC-C-HE-BM0.5AU
GTIN (EAN)	4008190400149
Qty.	100 items

HDC-C-HE-BM0.5AU

Weidmüller Interface GmbH & Co. KG
Klingenbergstraße 26
D-32758 Detmold
Germany

www.weidmueller.com

Technical data

Approvals

Approvals	
ROHS	Conform
UL File Number Search	UL Website
Certificate No. (cURus)	E92202

Dimensions and weights

Diameter	4.5 mm	Net weight	1.52 g

Environmental Product Compliance

RoHS Compliance Status	Compliant with exemption
RoHS Exemption (if applicable/known)	6c
REACH SVHC	Lead 7439-92-1
SCIP	6eabd5ae-2d6b-409e-8bdf-87c27ee10e40

General data

Contact diameter, male Ø	2.5 mm	Stripping length, rated connection	7.5 mm
Type of connection	Crimp connection	Version insert	HE, HEE, HQ, MixMate
Volume resistance	≤2 mΩ	Conductor cross-section, max.	0.5 mm²
Conductor cross-section, min.	0.5 mm²	Surface finish	gold
Plugging cycles	≥ 500	Type	Female
Basic material	Copper alloy	Series	HE
Production methods	turned	Surface layer thickness, max.	1.25 µm
Surface layer thickness, min.	0.75 µm	Cross-section for connected wire	0.5 - 0.5 mm²
Material of contact	Copper alloy		

Classifications

ETIM 8.0	EC000796	ETIM 9.0	EC000796
ETIM 10.0	EC000796	ECLASS 14.0	27-44-02-04
ECLASS 15.0	27-44-02-04		

HDC-C-HE-BM0.5AU

Weidmüller Interface GmbH & Co. KG
Klingenbergstraße 26
D-32758 Detmold
Germany

www.weidmueller.com

Drawings

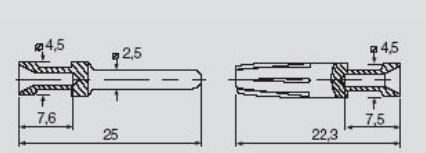

Leiterquerschnitt		Abisolierlänge
0,50 mm²	AWG 20	7,5 mm
0,75 - 1,00 mm²	AWG 18	7,5 mm
1,50 mm²	AWG 16	7,5 mm
2,50 mm²	AWG 14	7,5 mm
4,00 mm²	AWG 12	7,5 mm

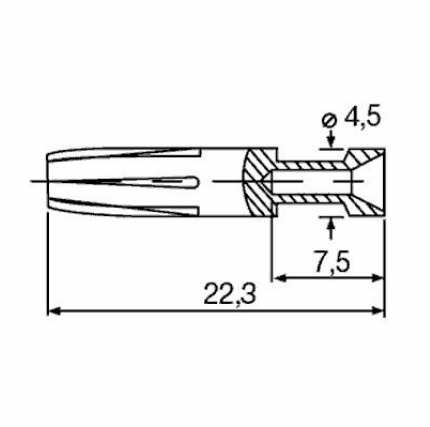

Weidmüller Interface GmbH & Co. KG
Klingenbergstraße 26
D-32758 Detmold
Germany

www.weidmueller.com

Accessories

Crimping tools

Crimping tools for turned contacts
- Ratchet guarantees precise crimping
- Release option in the event of incorrect operation
- With stop for exact positioning of the contacts.

General ordering data

Type	CTX CM 1.6/2.5	Version
Order No.	9018490000	Pressing tool, Crimping tool for contacts, 0.14mm², 4mm², W crimp
GTIN (EAN)	4008190884598	
Qty.	1 ST	
Type	CTIN CM 1.6/2.5	Version
Order No.	9205430000	Pressing tool, Crimping tool for contacts, 0.14mm², 6mm², 4-indent
GTIN (EAN)	4032248733446	crimp
Qty.	1 ST	

Contact removal tools

Weidmüller offers a variety of crimping tools, contact removal tools, and fibre optic tools.

General ordering data

Type	REMOVAL TOOL HE	Version
Order No.	1866750000	Tools, Contact Removal Tool
GTIN (EAN)	4032248437078	
Qty.	1 ST	