Data sheet

BLZ 5.00/08/90 SN OR BX

Weidmüller Interface GmbH & Co. KG
Klingenbergstraße 26
D-32758 Detmold
Germany

www.weidmueller.com

Do not use product for new developments

Product image

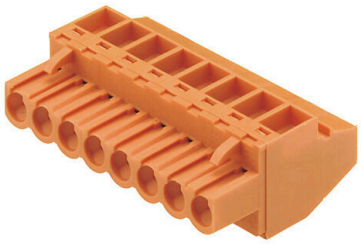

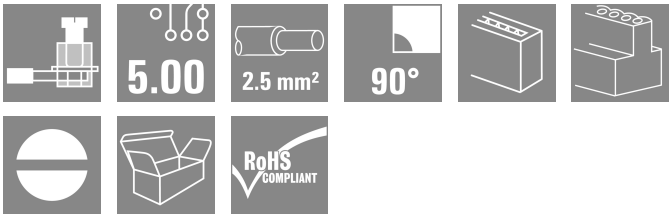

Similar to illustration

Female plugs with clamping-yoke screw for wire connection with 90° outlet direction. The female plugs provide space for labelling and can be coded.

General ordering data

Version	PCB plug-in connector, female plug, 5.00 mm, Number of poles: 8, 90°, Clamping yoke connection, Clamping range, max. : 3.31 mm², Box
Order No.	1636000000
Type	BLZ 5.00/08/90 SN OR BX
GTIN (EAN)	4008190265793
Qty.	42 items
Product data	IEC: 400 V / 15 A / 0.5 - 2.5 mm² UL: 300 V / 10 A / AWG 26 - AWG 12
Packaging	Box
Delivery status	Discontinued
Available until	2023-09-30T00:00:00+02:00
Alternative product	BLZP 5.00HC/08/90 SN OR BX

Creation date 24.02.2026 09:34:35 MEZ

Data sheet

BLZ 5.00/08/90 SN OR BX

Weidmüller Interface GmbH & Co. KG
Klingenbergstraße 26
D-32758 Detmold
Germany

www.weidmueller.com

Technical data

Approvals

Approvals	
ROHS	Conform
UL File Number Search	UL Website
Certificate No. (UR)	E60693

Dimensions and weights

Depth	26.9 mm	Depth (inches)	1.0591 inch
Height	14.1 mm	Height (inches)	0.5551 inch
Width	40 mm	Width (inches)	1.5748 inch
Net weight	15.6 g		

Environmental Product Compliance

RoHS Compliance Status	Compliant without exemption
REACH SVHC	No SVHC above 0.1 wt%

System Parameters

Product family	OMNIMATE Signal - series BL/SL 5.00	Type of connection	Field connection
Wire connection method	Clamping yoke connection	Pitch in mm (P)	5.00 mm
Pitch in inches (P)	0.197 "	Conductor outlet direction	90°
Number of poles	8	L1 in mm	35.00 mm
L1 in inches	1.379 "	Number of rows	1
Pin series quantity	1	Rated cross-section	2.5 mm²
Touch-safe protection acc. to DIN VDE 57 106	Safe from finger touch	Touch-safe protection acc. to DIN VDE 0470	IP 20
Protection degree	IP20	Volume resistance	5.00 mΩ
Can be coded	Yes	Stripping length	7 mm
Tightening torque, min.	0.4 Nm	Tightening torque, max.	0.5 Nm
Clamping screw	M 2.5	Screwdriver blade	0.6 x 3.5
Screwdriver blade standard	DIN 5264	Plugging cycles	25
Plugging force/pole, max.	10 N	Pulling force/pole, max.	8 N

Material data

Insulating material	PBT	Colour	orange
Colour chart (similar)	RAL 2000	Insulating material group	IIIa
Comparative Tracking Index (CTI)	≥ 200	Moisture Level (MSL)	
UL 94 flammability rating	V-0	Contact material	Cu-alloy
Contact surface	tinned	Layer structure of plug contact	4...8 µm Sn hot-dip tinned
Storage temperature, min.	-40 °C	Storage temperature, max.	70 °C
Operating temperature, min.	-50 °C	Operating temperature, max.	100 °C
Temperature range, installation, min.	-25 °C	Temperature range, installation, max.	100 °C

Conductors suitable for connection

Clamping range, min.	0.13 mm²	Clamping range, max.	3.31 mm²
Wire connection cross section AWG, min.	AWG 26	Wire connection cross section AWG, max.	AWG 12

BLZ 5.00/08/90 SN OR BX

Weidmüller Interface GmbH & Co. KG
Klingenbergstraße 26
D-32758 Detmold
Germany

www.weidmueller.com

Technical data

Solid, min. H05(07) V-U	0.5 mm²	Solid, max. H05(07) V-U	2.5 mm²
Flexible, min. H05(07) V-K	0.5 mm²	Flexible, max. H05(07) V-K	2.5 mm²
w. plastic collar ferrule, DIN 46228 pt 4, min.	0.5 mm²	w. plastic collar ferrule, DIN 46228 pt 4, max.	2.5 mm²
w. wire end ferrule, DIN 46228 pt 1, min.	0.5 mm²	w. wire end ferrule, DIN 46228 pt 1, max.	2.5 mm²
Plug gauge in accordance with EN 60999 a x b; ø	2.8 mm x 2.0 mm; 2.4 mm	Reference text	The outside diameter of the plastic collar should not be larger than the pitch (P), Length of ferrules is to be chosen depending on the product and the rated voltage.

Rated data acc. to IEC

tested acc. to standard	IEC 60664-1, IEC 61984	Rated current, min. number of poles (Tu=20°C)	15 A
Rated current, max. number of poles (Tu=20°C)	12 A	Rated current, min. number of poles (Tu=40°C)	12 A
Rated current, max. number of poles (Tu=40°C)	10 A	Rated voltage for surge voltage class / pollution degree II/2	400 V
Rated voltage for surge voltage class / pollution degree III/2	320 V	Rated voltage for surge voltage class / pollution degree III/3	250 V
Rated impulse voltage for surge voltage class/ pollution degree II/2	4 kV	Rated impulse voltage for surge voltage class/ pollution degree III/2	4 kV
Rated impulse voltage for surge voltage class/ contamination degree III/3	4 kV	Short-time withstand current resistance	3 x 1s with 120 A

Rated data acc. to CSA

Institute (CSA)	CSA	Certificate No. (CSA)	200039-1121690
Rated voltage (Use group B / CSA)	300 V	Rated voltage (Use group D / CSA)	300 V
Rated current (Use group B / CSA)	10 A	Rated current (Use group D / CSA)	10 A
Wire cross-section, AWG, min.	AWG 26	Wire cross-section, AWG, max.	AWG 12
Reference to approval values	Specifications are maximum values, details - see approval certificate.		

Rated data acc. to UL 1059

Institute (UR)	UR	Certificate No. (UR)	E60693
Rated voltage (Use group B / UL 1059)	300 V	Rated voltage (Use group D / UL 1059)	300 V
Rated current (Use group B / UL 1059)	10 A	Rated current (Use group D / UL 1059)	10 A
Wire cross-section, AWG, min.	AWG 26	Wire cross-section, AWG, max.	AWG 12
Reference to approval values	Specifications are maximum values, details - see approval certificate.		

Packing

Packaging	Box	VPE length	20.00 mm
VPE width	135.00 mm	VPE height	350.00 mm

Important note

IPC conformity	Conformity: The products are developed, manufactured and delivered according international recognized standards and norms and comply with the assured properties in the data sheet resp. fulfill decorative properties in accordance with IPC-A-610 "Class 2". Further claims on the products can be evaluated on request.
Notes	• Additional variants on request

BLZ 5.00/08/90 SN OR BX

Weidmüller Interface GmbH & Co. KG
Klingenbergstraße 26
D-32758 Detmold
Germany

www.weidmueller.com

Technical data

- Gold-plated contact surfaces on request
- Rated current related to rated cross-section & min. No. of poles.
- Wire end ferrule without plastic collar to DIN 46228/1
- Wire end ferrule with plastic collar to DIN 46228/4
- P on drawing = pitch
- Rated data refer only to the component itself. Clearance and creepage distances to other components are to be designed in accordance with the relevant application standards.
- In accordance with IEC 61984, OMNIMATE-connectors are connectors without breaking capacity (COC). During designated use, connectors are not allowed to be engaged or disengaged when live or under load
- Long term storage of the product with average temperature of 50 °C and maximum humidity 70%, 36 months

Classifications

ETIM 8.0	EC002638	ETIM 9.0	EC002638
ETIM 10.0	EC002638	ECLASS 14.0	27-46-02-02
ECLASS 15.0	27-46-02-02		

BLZ 5.00/08/90 SN OR BX

Weidmüller Interface GmbH & Co. KG
Klingenbergstraße 26
D-32758 Detmold
Germany

www.weidmueller.com

Drawings

Dimensional drawing

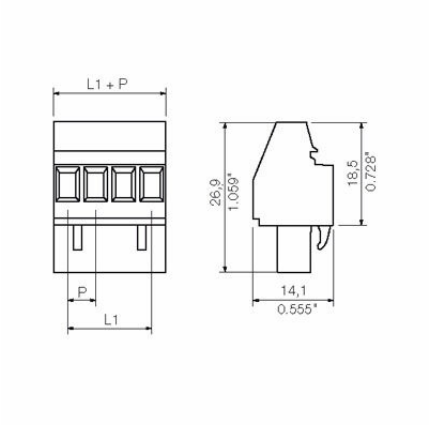

BLZ 5.00/08/90 SN OR BX

Weidmüller Interface GmbH & Co. KG
Klingenbergstraße 26
D-32758 Detmold
Germany

www.weidmueller.com

Accessories

Coding elements



Only connects what is supposed to be connected: the right connection at the right place.
Coding elements and locking devices clearly assign connecting elements during the manufacturing process and operation
The coding elements and locking devices are inserted prior to assembly or during the cable assembly phase.
The Weidmüller alternative: configure online using the variant configurator to precode prior to delivery.
Incorrect assembly on the circuit board and incorrect plugging of connecting elements is no longer possible.
The advantage: no troubleshooting during manufacture and no operational errors by the user.

General ordering data

Type	BLZ/SL KO BK BX	Version
Order No.	1545710000	PCB plug-in connector, Accessories, Coding element, black, Number
GTIN (EAN)	4008190087142	of poles: 1
Qty.	50 ST	
Type	BLZ/SL KO OR BX	Version
Order No.	1573010000	PCB plug-in connector, Accessories, Coding element, orange, Number
GTIN (EAN)	4008190048396	of poles: 1
Qty.	100 ST	