Data sheet

BL 3.50/04/180 SN BK BX

Weidmüller Interface GmbH & Co. KG
Klingenbergstraße 26
D-32758 Detmold
Germany

www.weidmueller.com

Product image

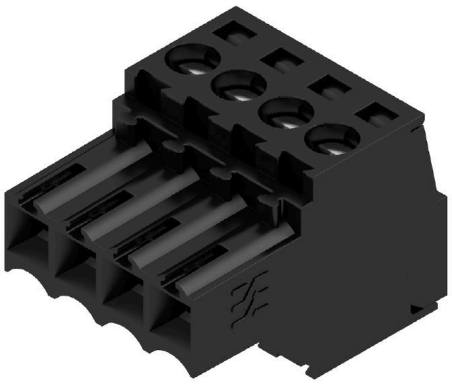

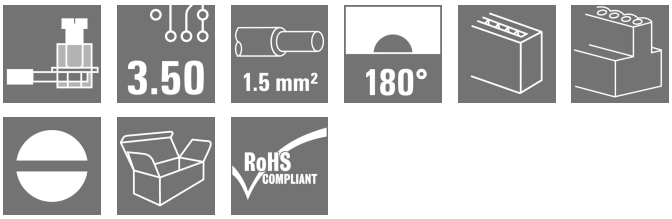

Female connectors with clamping yoke screw system for connecting conductors at 3.50 mm pitch. They provide space for labelling and can be coded.

General ordering data

Version	PCB plug-in connector, female plug, 3.50 mm, Number of poles: 4, 180°, Clamping yoke connection, Clamping range, max. : 1.5 mm², Box
Order No.	1615690000
Type	BL 3.50/04/180 SN BK BX
GTIN (EAN)	4008190059033
Qty.	132 items
Product data	IEC: 320 V / 17 A / 0.2 - 1.5 mm² UL: 300 V / 10 A / AWG 28 - AWG 14
Packaging	Box

BL 3.50/04/180 SN BK BX

Weidmüller Interface GmbH & Co. KG
Klingenbergstraße 26
D-32758 Detmold
Germany

www.weidmueller.com

Technical data

Approvals

Approvals	
ROHS	Conform
UL File Number Search	UL Website
Certificate No. (UR)	E60693

Dimensions and weights

Depth	18.5 mm	Depth (inches)	0.7283 inch
Height	13 mm	Height (inches)	0.5118 inch
Width	14 mm	Width (inches)	0.5512 inch
Net weight	2.88 g		

Environmental Product Compliance

RoHS Compliance Status	Compliant without exemption	
REACH SVHC	No SVHC above 0.1 wt%	
Product Carbon Footprint	Cradle to gate	0,261 kg CO2 eq.

System Parameters

Product family	OMNIMATE Signal - series BL/SL 3.50		
Type of connection	Field connection		
Wire connection method	Clamping yoke connection		
Pitch in mm (P)	3.50 mm		
Pitch in inches (P)	0.138 "		
Conductor outlet direction	180°		
Number of poles	4		
L1 in mm	10.50 mm		
L1 in inches	0.413 "		
Number of rows	1		
Pin series quantity	1		
Rated cross-section	1.5 mm²		
Touch-safe protection acc. to DIN VDE 57 106	Safe from finger touch		
Touch-safe protection acc. to DIN VDE 0470	IP20 plugged/ IP10 unplugged		
Protection degree	IP20, when fully mounted		
Volume resistance	≤5 mΩ		
Can be coded	Yes		
Stripping length	6 mm		
Clamping screw	M 2		
Screwdriver blade	0.4 x 2.5		
Screwdriver blade standard	DIN 5264		
Plugging cycles	25		
Plugging force/pole, max.	7 N		
Pulling force/pole, max.	5 N		
Tightening torque	Torque type	Wire connection	
	Usage information	Tightening torque	min. 0.2 Nm
			max. 0.25 Nm

BL 3.50/04/180 SN BK BX

Weidmüller Interface GmbH & Co. KG
Klingenbergstraße 26
D-32758 Detmold
Germany

www.weidmueller.com

Technical data

Material data

Insulating material	PBT	Colour	black
Colour chart (similar)	RAL 9011	Insulating material group	IIIa
Comparative Tracking Index (CTI)	≥ 200	Moisture Level (MSL)	
UL 94 flammability rating	V-0	Contact material	Cu-alloy
Contact surface	tinned	Layer structure of plug contact	4...8 µm Sn hot-dip tinned
Storage temperature, min.	-40 °C	Storage temperature, max.	70 °C
Operating temperature, min.	-50 °C	Operating temperature, max.	100 °C
Temperature range, installation, min.	-30 °C	Temperature range, installation, max.	100 °C

Conductors suitable for connection

Clamping range, min.	0.08 mm²
Clamping range, max.	1.5 mm²
Wire connection cross section AWG, min.	AWG 28
Wire connection cross section AWG, max.	AWG 14
Solid, min. H05(07) V-U	0.2 mm²
Solid, max. H05(07) V-U	1.5 mm²
Flexible, min. H05(07) V-K	0.2 mm²
Flexible, max. H05(07) V-K	1.5 mm²
w. plastic collar ferrule, DIN 46228 pt 4, min.	0.2 mm²
w. plastic collar ferrule, DIN 46228 pt 4, max.	1.5 mm²
w. wire end ferrule, DIN 46228 pt 1, min.	0.2 mm²
w. wire end ferrule, DIN 46228 pt 1, max.	1.5 mm²
Plug gauge in accordance with EN 60999 a x b; ø	2.4 mm x 1.5 mm

Clampable conductor	Cross-section for conductor connection	Type	fine-wired	
		nominal	0.5 mm²	
	wire end ferrule	Stripping length	nominal	8 mm
		Recommended wire-end ferrule	H0,5/12 OR	
		Stripping length	nominal	6 mm
		Recommended wire-end ferrule	H0,5/6	
	Cross-section for conductor connection	Type	fine-wired	
		nominal	0.75 mm²	
	wire end ferrule	Stripping length	nominal	8 mm
		Recommended wire-end ferrule	H0,75/12 W	
		Stripping length	nominal	6 mm
		Recommended wire-end ferrule	H0,75/6	
	Cross-section for conductor connection	Type	fine-wired	
		nominal	1 mm²	
	wire end ferrule	Stripping length	nominal	8 mm
		Recommended wire-end ferrule	H1,0/12 GE	
		Stripping length	nominal	6 mm
		Recommended wire-end ferrule	H1,0/6	
	Cross-section for conductor connection	Type	fine-wired	
		nominal	0.25 mm²	
	wire end ferrule	Stripping length	nominal	8 mm

BL 3.50/04/180 SN BK BX

Weidmüller Interface GmbH & Co. KG
Klingenbergstraße 26
D-32758 Detmold
Germany

www.weidmueller.com

Technical data

		Recommended wire-end ferrule	H0,25/10 HBL
		Stripping length	nominal 5 mm
		Recommended wire-end ferrule	H0,25/5
	Cross-section for conductor connection	Type	fine-wired
		nominal	0.34 mm²
	wire end ferrule	Stripping length	nominal 8 mm
		Recommended wire-end ferrule	H0,34/10 TK
Reference text	The outside diameter of the plastic collar should not be larger than the pitch (P), Length of ferrules is to be chosen depending on the product and the rated voltage.		

Rated data acc. to IEC

tested acc. to standard	IEC 60664-1, IEC 61984	Rated current, min. number of poles (Tu=20°C)	17 A
Rated current, max. number of poles (Tu=20°C)	12 A	Rated current, min. number of poles (Tu=40°C)	14.5 A
Rated current, max. number of poles (Tu=40°C)	10 A	Rated voltage for surge voltage class / pollution degree II/2	320 V
Rated voltage for surge voltage class / pollution degree III/2	160 V	Rated voltage for surge voltage class / pollution degree III/3	160 V
Rated impulse voltage for surge voltage class/ pollution degree II/2	2.5 kV	Rated impulse voltage for surge voltage class/ pollution degree III/2	2.5 kV
Rated impulse voltage for surge voltage class/ contamination degree III/3	2.5 kV	Short-time withstand current resistance	3 x 1s with 100 A

Rated data acc. to CSA

Institute (CSA)	CSA	Certificate No. (CSA)	154685-1318353
Rated voltage (Use group B / CSA)	300 V	Rated voltage (Use group D / CSA)	300 V
Rated current (Use group B / CSA)	10 A	Rated current (Use group D / CSA)	10 A
Wire cross-section, AWG, min.	AWG 28	Wire cross-section, AWG, max.	AWG 14
Reference to approval values	Specifications are maximum values, details - see approval certificate.		

Rated data acc. to UL 1059

Institute (UR)	UR	Certificate No. (UR)	E60693
Rated voltage (Use group B / UL 1059)	300 V	Rated voltage (Use group D / UL 1059)	300 V
Rated current (Use group B / UL 1059)	10 A	Rated current (Use group D / UL 1059)	10 A
Wire cross-section, AWG, min.	AWG 28	Wire cross-section, AWG, max.	AWG 14
Reference to approval values	Specifications are maximum values, details - see approval certificate.		

Packing

Packaging	Box	VPE length	351.00 mm
VPE width	136.00 mm	VPE height	26.00 mm

Type tests

Test: Durability of markings	Standard	DIN EN 61984 section 7.3.2 / 09.02 taking pattern from DIN EN 60068-2-70 / 07.96
	Test	mark of origin, type identification, approval marking SEV, approval marking CSA
	Evaluation	available

Weidmüller Interface GmbH & Co. KG
Klingenbergstraße 26
D-32758 Detmold
Germany

www.weidmueller.com

Technical data

	Test	durability	
	Evaluation	passed	
Test: Misengagement (Non-interchangeability)	Standard	DIN EN 61984 section 6.3 and 6.9.1 / 09.02, DIN IEC 60512 part 7 section 5 / 05.94	
	Test	180° turned with coding elements	
	Evaluation	passed	
Test: Clampable cross section	Standard	DIN EN 60999-1 section 7 and 9.1 / 12.00, DIN EN 60947-1 section 8.2.4.5.1 / 12.99	
	Conductor type	Type of conductor and conductor cross-section	solid 0.2 mm²
		Type of conductor and conductor cross-section	stranded 0.2 mm²
		Type of conductor and conductor cross-section	solid 1.5 mm²
		Type of conductor and conductor cross-section	stranded 1.5 mm²
		Type of conductor and conductor cross-section	AWG 28/1
		Type of conductor and conductor cross-section	AWG 28/19
		Type of conductor and conductor cross-section	AWG 16/1
		Type of conductor and conductor cross-section	AWG 16/19
	Evaluation	passed	
Test for damage to and accidental loosening of conductors	Standard	DIN EN 60999-1 section 9.4 / 12.00	
	Requirement	0.2 kg	
	Conductor type	Type of conductor and conductor cross-section	AWG 28/1
		Type of conductor and conductor cross-section	AWG 28/19
	Evaluation	passed	
	Requirement	0.3 kg	
	Conductor type	Type of conductor and conductor cross-section	2 × AWG 24/1
		Type of conductor and conductor cross-section	2 × AWG 24/19 with wire end ferrule
	Evaluation	passed	
	Requirement	0.4 kg	
	Conductor type	Type of conductor and conductor cross-section	solid 1.5 mm²
		Type of conductor and conductor cross-section	stranded 1.5 mm²
		Type of conductor and conductor cross-section	AWG 16/7
	Evaluation	passed	
Pull-out test	Standard	DIN EN 60999-1 section 9.5 / 12.00	
	Requirement	≥5 N	

Weidmüller Interface GmbH & Co. KG
Klingenbergstraße 26
D-32758 Detmold
Germany

www.weidmueller.com

Technical data

Conductor type	Type of conductor and conductor cross-section	AWG 28/1
	Type of conductor and conductor cross-section	AWG 28/19
Evaluation	passed	
Requirement	≥10 N	
Conductor type	Type of conductor and conductor cross-section	2 × AWG 24/1
	Type of conductor and conductor cross-section	2 × AWG 24/19 with wire end ferrule
Evaluation	passed	
Requirement	≥40 N	
Conductor type	Type of conductor and conductor cross-section	H05V-U1.5
	Type of conductor and conductor cross-section	H05V-K1.5
	Type of conductor and conductor cross-section	AWG 16/7
Evaluation	passed	

Important note

IPC conformity	Conformity: The products are developed, manufactured and delivered according international recognized standards and norms and comply with the assured properties in the data sheet resp. fulfill decorative properties in accordance with IPC-A-610 "Class 2". Further claims on the products can be evaluated on request.
Notes	• Additional variants on request • Gold-plated contact surfaces on request • Rated current related to rated cross-section & min. No. of poles. • Max. outer diameter of the conductor: 2.9 mm • Wire end ferrule without plastic collar to DIN 46228/1 • Wire end ferrule with plastic collar to DIN 46228/4 • P on drawing = pitch • Rated data refer only to the component itself. Clearance and creepage distances to other components are to be designed in accordance with the relevant application standards. • In accordance with IEC 61984, OMNIMATE-connectors are connectors without breaking capacity (COC). During designated use, connectors are not allowed to be engaged or disengaged when live or under load • Long term storage of the product with average temperature of 50 °C and maximum humidity 70%, 36 months

Classifications

ETIM 8.0	EC002638	ETIM 9.0	EC002638
ETIM 10.0	EC002638	ECLASS 14.0	27-46-02-02
ECLASS 15.0	27-46-02-02		

BL 3.50/04/180 SN BK BX

Weidmüller Interface GmbH & Co. KG
Klingenbergstraße 26
D-32758 Detmold
Germany

www.weidmueller.com

Drawings

Product image

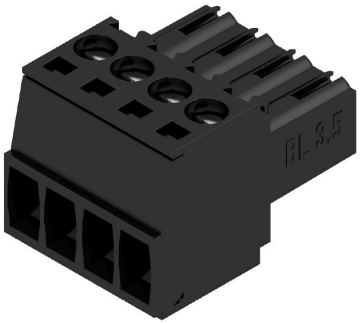

Dimensional drawing

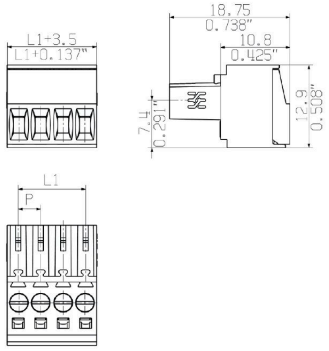

Graph

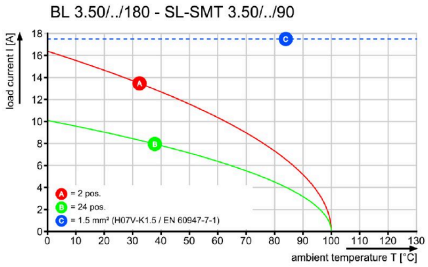

Graph

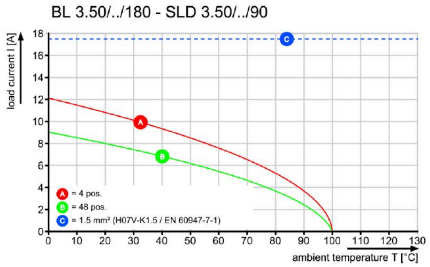

Graph

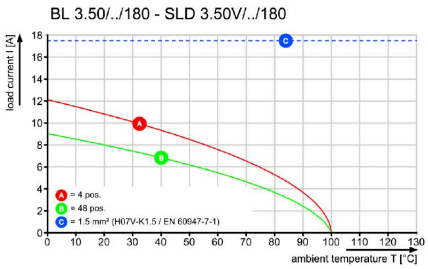
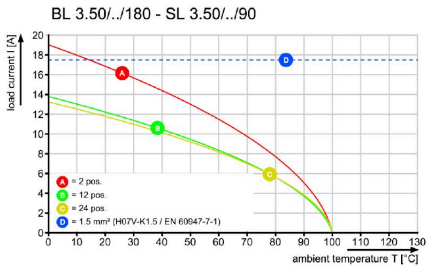
Graph