Data sheet

KWPN-M16/120 90

Weidmüller Interface GmbH & Co. KG
Klingenbergstraße 26
D-32758 Detmold
Germany

www.weidmueller.com

The use of insulated connectors guarantees users consistent electrical connection quality in the long term.

- Wide range of insulated and non-insulated cable lugs and connectors
- Tubular cable lugs according to current market standards (Euroseries)
- Compression cable lugs acc. to DIN 46235
- Sheet metal cable lugs acc. to DIN 46234
- Insulated ring cable lugs to DIN 46237
- Insulated pin cable lugs to DIN 46231

General ordering data

Version	cable lug, terminal end,120 mm²
Order No.	1497770000
Type	KWPN-M16/120 90
GTIN (EAN)	4050118307030
Qty.	25 items

KWPN-M16/120 90

Weidmüller Interface GmbH & Co. KG
Klingenbergstraße 26
D-32758 Detmold
Germany

www.weidmueller.com

Technical data

Approvals

ROHS	Conform

Dimensions and weights

Net weight	110.04 g

Environmental Product Compliance

RoHS Compliance Status	Compliant without exemption
REACH SVHC	No SVHC above 0.1 wt%

Technical data

Version	DIN series 46235, 90°

Connectors

Conductor cross-section	120 mm²	Insulation	not available
Hole	M10	Inside diameter of shaft (d1)	15.5 mm
Outside diameter of shaft (d3)	21 mm	Shaft length (a)	35 mm
Connection length (l)	25.5 mm	Inside diameter of flange (d2)	10.5 mm
Flange width (b)	32 mm	Identification number Cu	20 K

Classifications

ETIM 8.0	EC001050	ETIM 9.0	EC001050
ETIM 10.0	EC001050	ECLASS 14.0	27-40-02-03
ECLASS 15.0	27-40-02-03		

KWPN-M16/120 90

Weidmüller Interface GmbH & Co. KG
Klingenbergstraße 26
D-32758 Detmold
Germany

www.weidmueller.com

Drawings

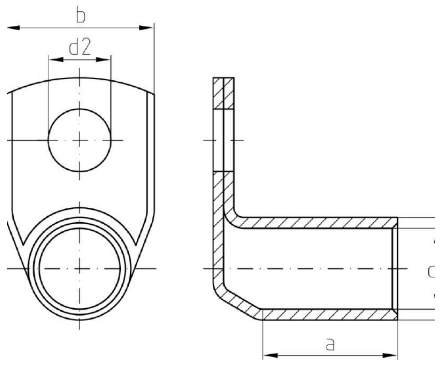

KWPN-M16/120 90

Weidmüller Interface GmbH & Co. KG
Klingenbergstraße 26
D-32758 Detmold
Germany

www.weidmueller.com

Accessories

Crimping tool for tubular (EN 13600) and compression cable lugs (DIN 46235)

Crimping tools for tubular and compression cable lugs with swivel crimping star.
- Integrated crimping star for different cross-sections
- Hexagon crimping tools for compression cable lugs
- WM-From crimping tools for tubular cable lugs
- wide processing range up to 70 or 120 mm²

General ordering data

Type	PZ PK 10/120	Version
Order No.	1500480000	10mm², 120mm², Hexagonal crimp
GTIN (EAN)	4050118309089	
Qty.	1 ST	

Tools

Crimping tools for cable lugs, connectors and wire-end ferrules with interchangeable inserts
- extremely fast processing thanks to hydraulic support
- large processing range up to 300 mm²
- 270° revolving quick-action crimping head
- automatic pressure limitation and monitoring via pressure sensor
- electronic control and monitoring of the crimping process
- Saving of all crimping cycles and error messages to internal memory
- Reading of all cycles and error messages via USB
- Li-ion rechargeable battery with charge status indicator: 18 V, 2 Ah

General ordering data

Type	EPG 45	Version
Order No.	1500830000	Pressing tool, 6mm², 150mm², Hexagonal crimp, WM crimp, Indent
GTIN (EAN)	4050118309317	crimp, Trapezoidal crimp, Oval crimping
Qty.	1 ST	

Weidmüller Interface GmbH & Co. KG
Klingenbergstraße 26
D-32758 Detmold
Germany

www.weidmueller.com

Accessories

... for tubular cable lugs (acc. to EN 13600)

Crimping tools for cable lugs, connectors and wire-end ferrules with interchangeable inserts
- extremely fast processing thanks to hydraulic support
- large processing range up to 300 mm²
- 270° revolving quick-action crimping head
- automatic pressure limitation and monitoring via pressure sensor
- electronic control and monitoring of the crimping process
- Saving of all crimping cycles and error messages to internal memory
- Reading of all cycles and error messages via USB
- Li-ion rechargeable battery with charge status indicator: 18 V, 2 Ah

General ordering data

Type	ES EPG 45 WM 120	Version
Order No.	1500900000	120mm², WM crimp
GTIN (EAN)	4050118309287	
Qty.	1 ST	

... for compression cable lugs (acc. to DIN 46235)

Crimping tools for cable lugs, connectors and wire-end ferrules with interchangeable inserts
- extremely fast processing thanks to hydraulic support
- large processing range up to 300 mm²
- 270° revolving quick-action crimping head
- automatic pressure limitation and monitoring via pressure sensor
- electronic control and monitoring of the crimping process
- Saving of all crimping cycles and error messages to internal memory
- Reading of all cycles and error messages via USB
- Li-ion rechargeable battery with charge status indicator: 18 V, 2 Ah

General ordering data

Type	ES EPG 45 HEX 120	Version
Order No.	1500990000	120mm², Hexagonal crimp
GTIN (EAN)	4050118309140	
Qty.	1 ST	

KWPN-M16/120 90

Weidmüller Interface GmbH & Co. KG
Klingenbergstraße 26
D-32758 Detmold
Germany

www.weidmueller.com

Accessories

Tools

Crimping tools for cable lugs, connectors and wire-end ferrules with interchangeable inserts
- extremely fast processing thanks to hydraulic support
- large processing range up to 300 mm²
- 270° revolving quick-action crimping head
- automatic pressure limitation and monitoring via pressure sensor
- electronic control and monitoring of the crimping process
- Saving of all crimping cycles and error messages to internal memory
- Reading of all cycles and error messages via USB
- Li-ion rechargeable battery with charge status indicator: 18 V, 2 Ah

General ordering data

Type	EPG 60	Version
Order No.	2453810000	Pressing tools, Tools, Pressing tool, 6mm², 300mm², Hexagonal
GTIN (EAN)	4050118468434	crimp, WM crimp, Indent crimp, Trapezoidal crimp, Oval crimping
Qty.	1 ST	

... for tubular cable lugs

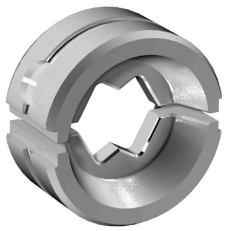

Crimping tools for cable lugs, connectors and wire-end ferrules with interchangeable inserts
- extremely fast processing thanks to hydraulic support
- large processing range up to 300 mm²
- 270° revolving quick-action crimping head
- automatic pressure limitation and monitoring via pressure sensor
- electronic control and monitoring of the crimping process
- Saving of all crimping cycles and error messages to internal memory
- Reading of all cycles and error messages via USB
- Li-ion rechargeable battery with charge status indicator: 18 V, 2 Ah

General ordering data

Type	ES EPG/HPG 60 WM 120	Version
Order No.	2469610000	Crimping tool insert, 120mm², WM crimp
GTIN (EAN)	4050118484007	
Qty.	1 ST	

KWPN-M16/120 90

Weidmüller Interface GmbH & Co. KG
Klingenbergstraße 26
D-32758 Detmold
Germany

www.weidmueller.com

Accessories

... for compression cable lugs

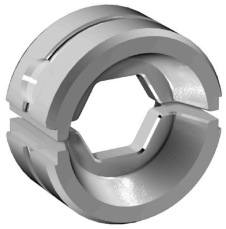

Crimping tools for cable lugs, connectors and wire-end ferrules with interchangeable inserts
- extremely fast processing thanks to hydraulic support
- large processing range up to 300 mm²
- 270° revolving quick-action crimping head
- automatic pressure limitation and monitoring via pressure sensor
- electronic control and monitoring of the crimping process
- Saving of all crimping cycles and error messages to internal memory
- Reading of all cycles and error messages via USB
- Li-ion rechargeable battery with charge status indicator: 18 V, 2 Ah

General ordering data

Type	ES EPG/HPG 60 HEX 120	Version
Order No.	2505230000	Crimping tool insert, 120mm², Hexagonal crimp
GTIN (EAN)	4050118519624	
Qty.	1 ST	

Tools

Crimping tools for cable lugs, connectors and wire-end ferrules with interchangeable inserts
- extremely fast processing thanks to hydraulic support
- large processing range up to 400 mm²
- 360° revolving quick action crimping head
- automatic pressure limitation and monitoring via pressure sensor
- Additional features for APG series:
- electronic control and monitoring of the crimping process
- Saving of all crimping cycles and error messages to internal memory
- Reading of all cycles and error messages via USB

General ordering data

Type	HPG 60	Version
Order No.	2453820000	6mm², 300mm², Hexagonal crimp, WM crimp, Indent crimp,
GTIN (EAN)	4050118468427	Trapezoidal crimp, Oval crimping
Qty.	1 ST	

KWPN-M16/120 90

Weidmüller Interface GmbH & Co. KG
Klingenbergstraße 26
D-32758 Detmold
Germany

www.weidmueller.com

Accessories

... for tubular cable lugs (acc. to EN 13600)

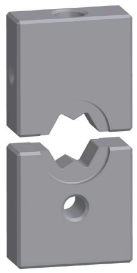

Crimping tools for cable lugs, connectors and wire-end ferrules with interchangeable inserts
- extremely fast processing thanks to hydraulic support
- large processing range up to 400 mm²
- 360° revolving quick action crimping head
- automatic pressure limitation and monitoring via pressure sensor
- Additional features for APG series:
- electronic control and monitoring of the crimping process
- Saving of all crimping cycles and error messages to internal memory
- Reading of all cycles and error messages via USB

General ordering data

Type	ES APG 80 WM 120	Version
Order No.	1502540000	120mm², WM crimp
GTIN (EAN)	4050118310429	
Qty.	1 ST	

... for compression cable lugs (acc. to DIN 46235)

Crimping tools for cable lugs, connectors and wire-end ferrules with interchangeable inserts
- extremely fast processing thanks to hydraulic support
- large processing range up to 400 mm²
- 360° revolving quick action crimping head
- automatic pressure limitation and monitoring via pressure sensor
- Additional features for APG series:
- electronic control and monitoring of the crimping process
- Saving of all crimping cycles and error messages to internal memory
- Reading of all cycles and error messages via USB

General ordering data

Type	ES APG 80 HEX 120	Version
Order No.	1502700000	120mm², Hexagonal crimp
GTIN (EAN)	4050118310931	
Qty.	1 ST	