Data sheet

KWN-M16/-300 90

Weidmüller Interface GmbH & Co. KG
Klingenbergstraße 26
D-32758 Detmold
Germany

www.weidmueller.com

The use of insulated connectors guarantees users consistent electrical connection quality in the long term.

- Wide range of insulated and non-insulated cable lugs and connectors
- Tubular cable lugs according to current market standards (Euroseries)
- Compression cable lugs acc. to DIN 46235
- Sheet metal cable lugs acc. to DIN 46234
- Insulated ring cable lugs to DIN 46237
- Insulated pin cable lugs to DIN 46231

General ordering data

Version	cable lug, terminal end,300 mm²,300 mm² - 300 mm²
Order No.	1497310000
Type	KWN-M16/-300 90
GTIN (EAN)	4050118306941
Qty.	20 items
Delivery status	This article will no longer be available in the future.
Available until	2026-03-31T00:00:00+02:00

KWN-M16/-300 90

Weidmüller Interface GmbH & Co. KG
Klingenbergstraße 26
D-32758 Detmold
Germany

www.weidmueller.com

Technical data

Approvals

ROHS	Conform

Dimensions and weights

Net weight	206.1 g

Environmental Product Compliance

RoHS Compliance Status	Compliant without exemption
REACH SVHC	No SVHC above 0.1 wt%

Technical data

Version	Euro series 90°

Connectors

Conductor cross-section, max.	300 mm²	Conductor cross-section, min.	300 mm²
Conductor cross-section	300 mm²	Insulation	not available
Hole	M 16	Identification colour	None
Inside diameter of shaft (d1)	24 mm	Outside diameter of shaft (d3)	30 mm
Shaft length (a)	41 mm	Connection length (l)	34 mm
Inside diameter of flange (d2)	17 mm	Flange width (b)	43 mm

Classifications

ETIM 6.0	EC001051	ETIM 7.0	EC001051
ETIM 8.0	EC001051	ETIM 9.0	EC001051
ETIM 10.0	EC001051	ECLASS 9.0	27-40-02-05
ECLASS 9.1	27-40-02-05	ECLASS 10.0	27-40-02-05
ECLASS 11.0	27-40-02-05	ECLASS 12.0	27-40-02-05
ECLASS 13.0	27-40-02-05	ECLASS 14.0	27-40-02-05
ECLASS 15.0	27-40-02-05		

KWN-M16/-300 90

Weidmüller Interface GmbH & Co. KG
Klingenbergstraße 26
D-32758 Detmold
Germany

www.weidmueller.com

Drawings

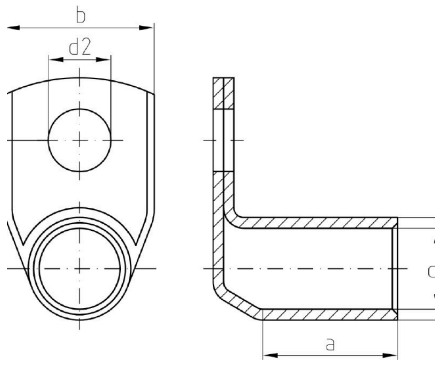

KWN-M16/-300 90

Weidmüller Interface GmbH & Co. KG
Klingenbergstraße 26
D-32758 Detmold
Germany

www.weidmueller.com

Accessories

... for tubular cable lugs (acc. to EN 13600)

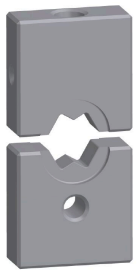

Crimping tools for cable lugs, connectors and wire-end ferrules with interchangeable inserts
- extremely fast processing thanks to hydraulic support
- large processing range up to 400 mm²
- 360° revolving quick action crimping head
- automatic pressure limitation and monitoring via pressure sensor
- Additional features for APG series:
- electronic control and monitoring of the crimping process
- Saving of all crimping cycles and error messages to internal memory
- Reading of all cycles and error messages via USB

General ordering data

Type	ES APG 80 WM 300	Version
Order No.	1502590000	300mm², WM crimp
GTIN (EAN)	4050118310511	
Qty.	1 ST	

... for compression cable lugs (acc. to DIN 46235)

Crimping tools for cable lugs, connectors and wire-end ferrules with interchangeable inserts
- extremely fast processing thanks to hydraulic support
- large processing range up to 400 mm²
- 360° revolving quick action crimping head
- automatic pressure limitation and monitoring via pressure sensor
- Additional features for APG series:
- electronic control and monitoring of the crimping process
- Saving of all crimping cycles and error messages to internal memory
- Reading of all cycles and error messages via USB

General ordering data

Type	ES APG 80 HEX 300	Version
Order No.	1502750000	300mm², Hexagonal crimp
GTIN (EAN)	4050118310962	
Qty.	1 ST	