Data sheet

KWN-M5/-6 90

Weidmüller Interface GmbH & Co. KG
Klingenbergstraße 26
D-32758 Detmold
Germany

www.weidmueller.com

The use of insulated connectors guarantees users consistent electrical connection quality in the long term.

- Wide range of insulated and non-insulated cable lugs and connectors
- Tubular cable lugs according to current market standards (Euroseries)
- Compression cable lugs acc. to DIN 46235
- Sheet metal cable lugs acc. to DIN 46234
- Insulated ring cable lugs to DIN 46237
- Insulated pin cable lugs to DIN 46231

General ordering data

Version	cable lug, terminal end,6 mm²,6 mm² - 6 mm²
Order No.	1496120000
Type	KWN-M5/-6 90
GTIN (EAN)	4050118305753
Qty.	100 items

KWN-M5/-6 90

Weidmüller Interface GmbH & Co. KG
Klingenbergstraße 26
D-32758 Detmold
Germany

www.weidmueller.com

Technical data

Approvals

ROHS	Conform

Dimensions and weights

Net weight	4.73 g

Environmental Product Compliance

RoHS Compliance Status	Compliant without exemption
REACH SVHC	No SVHC above 0.1 wt%

Technical data

Version	Euro series 90°

Connectors

Conductor cross-section, max.	6 mm²	Conductor cross-section, min.	6 mm²
Conductor cross-section	6 mm²	Insulation	not available
Hole	M 5	Identification colour	None
Inside diameter of shaft (d1)	3.5 mm	Outside diameter of shaft (d3)	6.5 mm
Shaft length (a)	8 mm	Connection length (l)	11.2 mm
Inside diameter of flange (d2)	5.3 mm	Flange width (b)	11 mm

Classifications

ETIM 8.0	EC001051	ETIM 9.0	EC001051
ETIM 10.0	EC001051	ECLASS 14.0	27-40-02-05
ECLASS 15.0	27-40-02-05		

KWN-M5/-6 90

Weidmüller Interface GmbH & Co. KG
Klingenbergstraße 26
D-32758 Detmold
Germany

www.weidmueller.com

Drawings

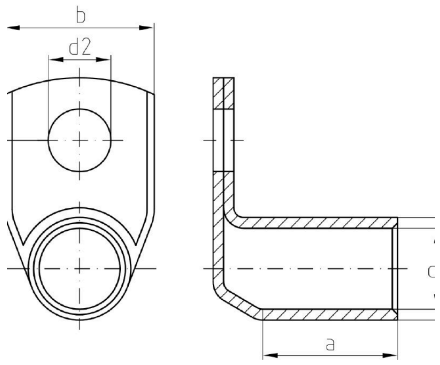

Weidmüller Interface GmbH & Co. KG
Klingenbergstraße 26
D-32758 Detmold
Germany

www.weidmueller.com

Accessories

Crimping tools

Crimping tools for non-insulated connectors
Rolled cable lugs, tubular cable lugs, terminal pins, parallel and serial connectors
- Ratchet guarantees precise crimping
- Release option in the event of incorrect operation

General ordering data

Type	HTN 21	Version
Order No.	9014610000	Pressing tool, Crimping tool for contacts, 0.5mm², 6mm², Indent
GTIN (EAN)	4008190152734	crimp
Qty.	1 ST	

Crimping tool for tubular (EN 13600) and compression cable lugs (DIN 46235)

Crimping tools for tubular and compression cable lugs with swivel crimping star.
- Integrated crimping star for different cross-sections
- Hexagon crimping tools for compression cable lugs
- WM-From crimping tools for tubular cable lugs
- wide processing range up to 70 or 120 mm²

General ordering data

Type	PZ RK 6/70	Version
Order No.	1500440000	6mm², 70mm², Hexagonal crimp
GTIN (EAN)	4050118309058	
Qty.	1 ST	

Tools

Crimping tools for cable lugs, connectors and wire-end ferrules with interchangeable inserts
- extremely fast processing thanks to hydraulic support
- large processing range up to 300 mm²
- 270° revolving quick-action crimping head
- automatic pressure limitation and monitoring via pressure sensor
- electronic control and monitoring of the crimping process
- Saving of all crimping cycles and error messages to internal memory
- Reading of all cycles and error messages via USB
- Li-ion rechargeable battery with charge status indicator: 18 V, 2 Ah

Weidmüller Interface GmbH & Co. KG
Klingenbergstraße 26
D-32758 Detmold
Germany

www.weidmueller.com

Accessories

General ordering data

Type	EPG 45	Version
Order No.	1500830000	Pressing tool, 6mm², 150mm², Hexagonal crimp, WM crimp, Indent
GTIN (EAN)	4050118309317	crimp, Trapezoidal crimp, Oval crimping
Qty.	1 ST	

... for tubular cable lugs (acc. to EN 13600)

Crimping tools for cable lugs, connectors and wire-end ferrules with interchangeable inserts
- extremely fast processing thanks to hydraulic support
- large processing range up to 300 mm²
- 270° revolving quick-action crimping head
- automatic pressure limitation and monitoring via pressure sensor
- electronic control and monitoring of the crimping process
- Saving of all crimping cycles and error messages to internal memory
- Reading of all cycles and error messages via USB
- Li-ion rechargeable battery with charge status indicator: 18 V, 2 Ah

General ordering data

Type	ES EPG 45 WM 6	Version
Order No.	1500850000	Accessories, 6mm², WM crimp
GTIN (EAN)	4050118309485	
Qty.	1 ST	

... for compression cable lugs (acc. to DIN 46235)

Crimping tools for cable lugs, connectors and wire-end ferrules with interchangeable inserts
- extremely fast processing thanks to hydraulic support
- large processing range up to 300 mm²
- 270° revolving quick-action crimping head
- automatic pressure limitation and monitoring via pressure sensor
- electronic control and monitoring of the crimping process
- Saving of all crimping cycles and error messages to internal memory
- Reading of all cycles and error messages via USB
- Li-ion rechargeable battery with charge status indicator: 18 V, 2 Ah

General ordering data

Type	ES EPG 45 HEX 6	Version
Order No.	1500930000	6mm², Hexagonal crimp
GTIN (EAN)	4050118309508	
Qty.	1 ST	

Weidmüller Interface GmbH & Co. KG
Klingenbergstraße 26
D-32758 Detmold
Germany

www.weidmueller.com

Accessories

Tools

Crimping tools for cable lugs, connectors and wire-end ferrules with interchangeable inserts
- extremely fast processing thanks to hydraulic support
- large processing range up to 300 mm²
- 270° revolving quick-action crimping head
- automatic pressure limitation and monitoring via pressure sensor
- electronic control and monitoring of the crimping process
- Saving of all crimping cycles and error messages to internal memory
- Reading of all cycles and error messages via USB
- Li-ion rechargeable battery with charge status indicator: 18 V, 2 Ah

General ordering data

Type	EPG 60	Version
Order No.	2453810000	Pressing tools, Tools, Pressing tool, 6mm², 300mm², Hexagonal
GTIN (EAN)	4050118468434	crimp, WM crimp, Indent crimp, Trapezoidal crimp, Oval crimping
Qty.	1 ST	

... for tubular cable lugs

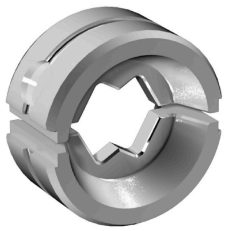

Crimping tools for cable lugs, connectors and wire-end ferrules with interchangeable inserts
- extremely fast processing thanks to hydraulic support
- large processing range up to 300 mm²
- 270° revolving quick-action crimping head
- automatic pressure limitation and monitoring via pressure sensor
- electronic control and monitoring of the crimping process
- Saving of all crimping cycles and error messages to internal memory
- Reading of all cycles and error messages via USB
- Li-ion rechargeable battery with charge status indicator: 18 V, 2 Ah

General ordering data

Type	ES EPG/HPG 60 WM 6	Version
Order No.	2469380000	Crimping tool insert, 6mm², WM crimp
GTIN (EAN)	4050118532937	
Qty.	1 ST	

Weidmüller Interface GmbH & Co. KG
Klingenbergstraße 26
D-32758 Detmold
Germany

www.weidmueller.com

Accessories

... for compression cable lugs

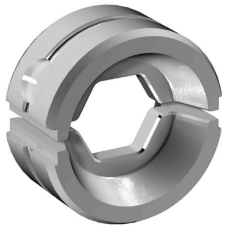

Crimping tools for cable lugs, connectors and wire-end ferrules with interchangeable inserts
- extremely fast processing thanks to hydraulic support
- large processing range up to 300 mm²
- 270° revolving quick-action crimping head
- automatic pressure limitation and monitoring via pressure sensor
- electronic control and monitoring of the crimping process
- Saving of all crimping cycles and error messages to internal memory
- Reading of all cycles and error messages via USB
- Li-ion rechargeable battery with charge status indicator: 18 V, 2 Ah

General ordering data

Type	ES EPG/HPG 60 HEX 6	Version
Order No.	2505150000	Accessories, 6mm², Hexagonal crimp
GTIN (EAN)	4050118519532	
Qty.	1 ST	

Tools

Crimping tools for cable lugs, connectors and wire-end ferrules with interchangeable inserts
- extremely fast processing thanks to hydraulic support
- large processing range up to 400 mm²
- 360° revolving quick action crimping head
- automatic pressure limitation and monitoring via pressure sensor
- Additional features for APG series:
- electronic control and monitoring of the crimping process
- Saving of all crimping cycles and error messages to internal memory
- Reading of all cycles and error messages via USB

General ordering data

Type	HPG 60	Version
Order No.	2453820000	6mm², 300mm², Hexagonal crimp, WM crimp, Indent crimp,
GTIN (EAN)	4050118468427	Trapezoidal crimp, Oval crimping
Qty.	1 ST	

Weidmüller Interface GmbH & Co. KG
Klingenbergstraße 26
D-32758 Detmold
Germany

www.weidmueller.com

Accessories

... for tubular cable lugs (acc. to EN 13600)

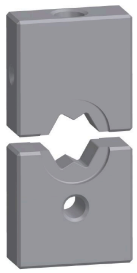

Crimping tools for cable lugs, connectors and wire-end ferrules with interchangeable inserts
- extremely fast processing thanks to hydraulic support
- large processing range up to 400 mm²
- 360° revolving quick action crimping head
- automatic pressure limitation and monitoring via pressure sensor
- Additional features for APG series:
- electronic control and monitoring of the crimping process
- Saving of all crimping cycles and error messages to internal memory
- Reading of all cycles and error messages via USB

General ordering data

Type	ES APG 80 WM 6	Version
Order No.	1502430000	6mm², WM crimp
GTIN (EAN)	4050118310801	
Qty.	1 ST	

... for compression cable lugs (acc. to DIN 46235)

Crimping tools for cable lugs, connectors and wire-end ferrules with interchangeable inserts
- extremely fast processing thanks to hydraulic support
- large processing range up to 400 mm²
- 360° revolving quick action crimping head
- automatic pressure limitation and monitoring via pressure sensor
- Additional features for APG series:
- electronic control and monitoring of the crimping process
- Saving of all crimping cycles and error messages to internal memory
- Reading of all cycles and error messages via USB

General ordering data

Type	ES APG 80 HEX 6	Version
Order No.	1502600000	6mm², Hexagonal crimp
GTIN (EAN)	4050118310672	
Qty.	1 ST	