Data sheet

KWN-M12/-35 90

Weidmüller Interface GmbH & Co. KG
Klingenbergstraße 26
D-32758 Detmold
Germany

www.weidmueller.com

The use of insulated connectors guarantees users consistent electrical connection quality in the long term.

- Wide range of insulated and non-insulated cable lugs and connectors
- Tubular cable lugs according to current market standards (Euroseries)
- Compression cable lugs acc. to DIN 46235
- Sheet metal cable lugs acc. to DIN 46234
- Insulated ring cable lugs to DIN 46237
- Insulated pin cable lugs to DIN 46231

General ordering data

Version	cable lug, terminal end,35 mm²,35 mm² - 35 mm²
Order No.	1495940000
Type	KWN-M12/-35 90
GTIN (EAN)	4050118305623
Qty.	100 items

KWN-M12/-35 90

Weidmüller Interface GmbH & Co. KG
Klingenbergstraße 26
D-32758 Detmold
Germany

www.weidmueller.com

Technical data

Approvals

ROHS	Conform

Dimensions and weights

Net weight	23.48 g

Environmental Product Compliance

RoHS Compliance Status	Compliant without exemption
REACH SVHC	No SVHC above 0.1 wt%

Technical data

Version	Euro series 90°

Connectors

Conductor cross-section, max.	35 mm²	Conductor cross-section, min.	35 mm²
Conductor cross-section	35 mm²	Insulation	not available
Hole	M 12	Identification colour	None
Inside diameter of shaft (d1)	8.5 mm	Outside diameter of shaft (d3)	12 mm
Shaft length (a)	16 mm	Connection length (l)	21.5 mm
Inside diameter of flange (d2)	13 mm	Flange width (b)	22 mm

Classifications

ETIM 8.0	EC001051	ETIM 9.0	EC001051
ETIM 10.0	EC001051	ECLASS 14.0	27-40-02-05
ECLASS 15.0	27-40-02-05		

KWN-M12/-35 90

Weidmüller Interface GmbH & Co. KG
Klingenbergstraße 26
D-32758 Detmold
Germany

www.weidmueller.com

Drawings

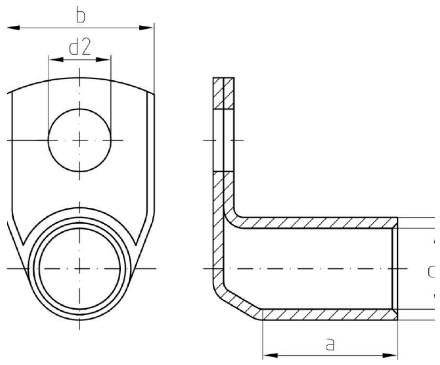

Weidmüller Interface GmbH & Co. KG
Klingenbergstraße 26
D-32758 Detmold
Germany

www.weidmueller.com

Accessories

Crimping tool for tubular (EN 13600) and compression cable lugs (DIN 46235)

Crimping tools for tubular and compression cable lugs with swivel crimping star.
- Integrated crimping star for different cross-sections
- Hexagon crimping tools for compression cable lugs
- WM-From crimping tools for tubular cable lugs
- wide processing range up to 70 or 120 mm²

General ordering data

Type	PZ RK 6/70	Version
Order No.	1500440000	6mm², 70mm², Hexagonal crimp
GTIN (EAN)	4050118309058	
Qty.	1 ST	
Type	PZ RK 10/120	Version
Order No.	1500450000	10mm², 120mm², Hexagonal crimp
GTIN (EAN)	4050118309065	
Qty.	1 ST	

Tools

Crimping tools for cable lugs, connectors and wire-end ferrules with interchangeable inserts
- extremely fast processing thanks to hydraulic support
- large processing range up to 300 mm²
- 270° revolving quick-action crimping head
- automatic pressure limitation and monitoring via pressure sensor
- electronic control and monitoring of the crimping process
- Saving of all crimping cycles and error messages to internal memory
- Reading of all cycles and error messages via USB
- Li-ion rechargeable battery with charge status indicator: 18 V, 2 Ah

General ordering data

Type	EPG 45	Version
Order No.	1500830000	Pressing tool, 6mm², 150mm², Hexagonal crimp, WM crimp, Indent
GTIN (EAN)	4050118309317	crimp, Trapezoidal crimp, Oval crimping
Qty.	1 ST	

Weidmüller Interface GmbH & Co. KG
Klingenbergstraße 26
D-32758 Detmold
Germany

www.weidmueller.com

Accessories

... for tubular cable lugs (acc. to EN 13600)

Crimping tools for cable lugs, connectors and wire-end ferrules with interchangeable inserts
- extremely fast processing thanks to hydraulic support
- large processing range up to 300 mm²
- 270° revolving quick-action crimping head
- automatic pressure limitation and monitoring via pressure sensor
- electronic control and monitoring of the crimping process
- Saving of all crimping cycles and error messages to internal memory
- Reading of all cycles and error messages via USB
- Li-ion rechargeable battery with charge status indicator: 18 V, 2 Ah

General ordering data

Type	ES EPG 45 WM 16/35	Version
Order No.	1500920000	35mm², WM crimp
GTIN (EAN)	4050118309478	
Qty.	1 ST	

... for compression cable lugs (acc. to DIN 46235)

Crimping tools for cable lugs, connectors and wire-end ferrules with interchangeable inserts
- extremely fast processing thanks to hydraulic support
- large processing range up to 300 mm²
- 270° revolving quick-action crimping head
- automatic pressure limitation and monitoring via pressure sensor
- electronic control and monitoring of the crimping process
- Saving of all crimping cycles and error messages to internal memory
- Reading of all cycles and error messages via USB
- Li-ion rechargeable battery with charge status indicator: 18 V, 2 Ah

General ordering data

Type	ES EPG 45 HEX 16/35	Version
Order No.	1500950000	35mm², Hexagonal crimp
GTIN (EAN)	4050118309492	
Qty.	1 ST	

Weidmüller Interface GmbH & Co. KG
Klingenbergstraße 26
D-32758 Detmold
Germany

www.weidmueller.com

Accessories

Tools

Crimping tools for cable lugs, connectors and wire-end ferrules with interchangeable inserts
- extremely fast processing thanks to hydraulic support
- large processing range up to 300 mm²
- 270° revolving quick-action crimping head
- automatic pressure limitation and monitoring via pressure sensor
- electronic control and monitoring of the crimping process
- Saving of all crimping cycles and error messages to internal memory
- Reading of all cycles and error messages via USB
- Li-ion rechargeable battery with charge status indicator: 18 V, 2 Ah

General ordering data

Type	EPG 60	Version
Order No.	2453810000	Pressing tools, Tools, Pressing tool, 6mm², 300mm², Hexagonal
GTIN (EAN)	4050118468434	crimp, WM crimp, Indent crimp, Trapezoidal crimp, Oval crimping
Qty.	1 ST	

... for tubular cable lugs

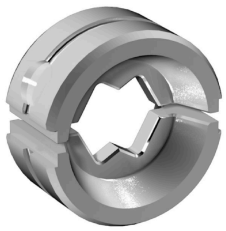

Crimping tools for cable lugs, connectors and wire-end ferrules with interchangeable inserts
- extremely fast processing thanks to hydraulic support
- large processing range up to 300 mm²
- 270° revolving quick-action crimping head
- automatic pressure limitation and monitoring via pressure sensor
- electronic control and monitoring of the crimping process
- Saving of all crimping cycles and error messages to internal memory
- Reading of all cycles and error messages via USB
- Li-ion rechargeable battery with charge status indicator: 18 V, 2 Ah

General ordering data

Type	ES EPG/HPG 60 WM 35	Version
Order No.	2469570000	Crimping tool insert, 35mm², WM crimp
GTIN (EAN)	4050118483826	
Qty.	1 ST	

Weidmüller Interface GmbH & Co. KG
Klingenbergstraße 26
D-32758 Detmold
Germany

www.weidmueller.com

Accessories

... for compression cable lugs

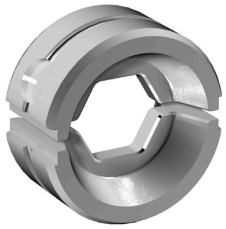

Crimping tools for cable lugs, connectors and wire-end ferrules with interchangeable inserts
- extremely fast processing thanks to hydraulic support
- large processing range up to 300 mm²
- 270° revolving quick-action crimping head
- automatic pressure limitation and monitoring via pressure sensor
- electronic control and monitoring of the crimping process
- Saving of all crimping cycles and error messages to internal memory
- Reading of all cycles and error messages via USB
- Li-ion rechargeable battery with charge status indicator: 18 V, 2 Ah

General ordering data

Type	ES EPG/HPG 60 HEX 35	Version
Order No.	2505190000	Crimping tool insert, 35mm², Hexagonal crimp
GTIN (EAN)	4050118519587	
Qty.	1 ST	

Tools

Crimping tools for cable lugs, connectors and wire-end ferrules with interchangeable inserts
- extremely fast processing thanks to hydraulic support
- large processing range up to 400 mm²
- 360° revolving quick action crimping head
- automatic pressure limitation and monitoring via pressure sensor
- Additional features for APG series:
- electronic control and monitoring of the crimping process
- Saving of all crimping cycles and error messages to internal memory
- Reading of all cycles and error messages via USB

General ordering data

Type	HPG 60	Version
Order No.	2453820000	6mm², 300mm², Hexagonal crimp, WM crimp, Indent crimp,
GTIN (EAN)	4050118468427	Trapezoidal crimp, Oval crimping
Qty.	1 ST	

Weidmüller Interface GmbH & Co. KG
Klingenbergstraße 26
D-32758 Detmold
Germany

www.weidmueller.com

Accessories

... for tubular cable lugs (acc. to EN 13600)

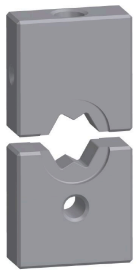

Crimping tools for cable lugs, connectors and wire-end ferrules with interchangeable inserts
- extremely fast processing thanks to hydraulic support
- large processing range up to 400 mm²
- 360° revolving quick action crimping head
- automatic pressure limitation and monitoring via pressure sensor
- Additional features for APG series:
- electronic control and monitoring of the crimping process
- Saving of all crimping cycles and error messages to internal memory
- Reading of all cycles and error messages via USB

General ordering data

Type	ES APG 80 WM 35	Version
Order No.	1502490000	35mm², WM crimp
GTIN (EAN)	4050118310597	
Qty.	1 ST	

... for compression cable lugs (acc. to DIN 46235)

Crimping tools for cable lugs, connectors and wire-end ferrules with interchangeable inserts
- extremely fast processing thanks to hydraulic support
- large processing range up to 400 mm²
- 360° revolving quick action crimping head
- automatic pressure limitation and monitoring via pressure sensor
- Additional features for APG series:
- electronic control and monitoring of the crimping process
- Saving of all crimping cycles and error messages to internal memory
- Reading of all cycles and error messages via USB

General ordering data

Type	ES APG 80 HEX 35	Version
Order No.	1502650000	35mm², Hexagonal crimp
GTIN (EAN)	4050118310696	
Qty.	1 ST	