Data sheet

KSN/-25

Weidmüller Interface GmbH & Co. KG
Klingenbergstraße 26
D-32758 Detmold
Germany

www.weidmueller.com

The use of insulated connectors guarantees users consistent electrical connection quality in the long term.

- Wide range of insulated and non-insulated cable lugs and connectors
- Tubular cable lugs according to current market standards (Euroseries)
- Compression cable lugs acc. to DIN 46235
- Sheet metal cable lugs acc. to DIN 46234
- Insulated ring cable lugs to DIN 46237
- Insulated pin cable lugs to DIN 46231

General ordering data

Version	cable lug, terminal end,25 mm²,25 mm²
Order No.	1492800000
Type	KSN/-25
GTIN (EAN)	4050118302592
Qty.	50 items
Delivery status	This article will no longer be available in the future.
Available until	2026-03-31T00:00:00+02:00

KSN/-25

Weidmüller Interface GmbH & Co. KG
Klingenbergstraße 26
D-32758 Detmold
Germany

www.weidmueller.com

Technical data

Approvals

ROHS	Conform

Dimensions and weights

Net weight	6.54 g

Environmental Product Compliance

RoHS Compliance Status	Compliant without exemption
REACH SVHC	No SVHC above 0.1 wt%

Connectors

Conductor cross-section, max.	25 mm²	Conductor cross-section	25 mm²
Insulation	not available	Dimensions pin/plug	2,5 x 6,9 mm
Length 1 (l1)	34.1 mm	Inside diameter of shaft (d1)	7 mm
Length 2 (l2)	16 mm	Shaft length (a)	14 mm

Classifications

ETIM 6.0	EC001059	ETIM 7.0	EC001059
ETIM 8.0	EC001059	ETIM 9.0	EC001059
ETIM 10.0	EC001059	ECLASS 9.0	27-40-02-92
ECLASS 9.1	27-40-02-12	ECLASS 10.0	27-40-02-92
ECLASS 11.0	27-40-02-92	ECLASS 12.0	27-40-02-92
ECLASS 13.0	27-40-02-92	ECLASS 14.0	27-40-02-92
ECLASS 15.0	27-40-02-92		

Weidmüller Interface GmbH & Co. KG
Klingenbergstraße 26
D-32758 Detmold
Germany

www.weidmueller.com

Drawings

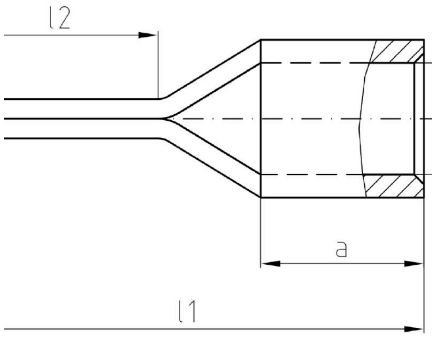

Weidmüller Interface GmbH & Co. KG
Klingenbergstraße 26
D-32758 Detmold
Germany

www.weidmueller.com

Accessories

Crimping tools

Crimping tools for non-insulated connectors
Rolled cable lugs, tubular cable lugs, terminal pins, parallel and serial connectors
- Ratchet guarantees precise crimping
- Release option in the event of incorrect operation

General ordering data

Type	CTN 25 D4	Version
Order No.	9006220000	Pressing tool, Crimping tool for contacts, 10mm², 25mm², Indent
GTIN (EAN)	4008190198633	crimp
Qty.	1 ST	

Tools

Crimping tools for cable lugs, connectors and wire-end ferrules with interchangeable inserts
- extremely fast processing thanks to hydraulic support
- large processing range up to 300 mm²
- 270° revolving quick-action crimping head
- automatic pressure limitation and monitoring via pressure sensor
- electronic control and monitoring of the crimping process
- Saving of all crimping cycles and error messages to internal memory
- Reading of all cycles and error messages via USB
- Li-ion rechargeable battery with charge status indicator: 18 V, 2 Ah

General ordering data

Type	EPG 45	Version
Order No.	1500830000	Pressing tool, 6mm², 150mm², Hexagonal crimp, WM crimp, Indent
GTIN (EAN)	4050118309317	crimp, Trapezoidal crimp, Oval crimping
Qty.	1 ST	

Weidmüller Interface GmbH & Co. KG
Klingenbergstraße 26
D-32758 Detmold
Germany

www.weidmueller.com

Accessories

... for tubular cable lugs (acc. to EN 13600)

Crimping tools for cable lugs, connectors and wire-end ferrules with interchangeable inserts
- extremely fast processing thanks to hydraulic support
- large processing range up to 300 mm²
- 270° revolving quick-action crimping head
- automatic pressure limitation and monitoring via pressure sensor
- electronic control and monitoring of the crimping process
- Saving of all crimping cycles and error messages to internal memory
- Reading of all cycles and error messages via USB
- Li-ion rechargeable battery with charge status indicator: 18 V, 2 Ah

General ordering data

Type	ES EPG 45 WM 25/50	Version
Order No.	1500880000	50mm², WM crimp
GTIN (EAN)	4050118309171	
Qty.	1 ST	

... for compression cable lugs (acc. to DIN 46235)

Crimping tools for cable lugs, connectors and wire-end ferrules with interchangeable inserts
- extremely fast processing thanks to hydraulic support
- large processing range up to 300 mm²
- 270° revolving quick-action crimping head
- automatic pressure limitation and monitoring via pressure sensor
- electronic control and monitoring of the crimping process
- Saving of all crimping cycles and error messages to internal memory
- Reading of all cycles and error messages via USB
- Li-ion rechargeable battery with charge status indicator: 18 V, 2 Ah

General ordering data

Type	ES EPG 45 HEX 25/50	Version
Order No.	1500970000	50mm², Hexagonal crimp
GTIN (EAN)	4050118309195	
Qty.	1 ST	

Weidmüller Interface GmbH & Co. KG
Klingenbergstraße 26
D-32758 Detmold
Germany

www.weidmueller.com

Accessories

Tools

Crimping tools for cable lugs, connectors and wire-end ferrules with interchangeable inserts
- extremely fast processing thanks to hydraulic support
- large processing range up to 300 mm²
- 270° revolving quick-action crimping head
- automatic pressure limitation and monitoring via pressure sensor
- electronic control and monitoring of the crimping process
- Saving of all crimping cycles and error messages to internal memory
- Reading of all cycles and error messages via USB
- Li-ion rechargeable battery with charge status indicator: 18 V, 2 Ah

General ordering data

Type	EPG 60	Version
Order No.	2453810000	Pressing tools, Tools, Pressing tool, 6mm², 300mm², Hexagonal
GTIN (EAN)	4050118468434	crimp, WM crimp, Indent crimp, Trapezoidal crimp, Oval crimping
Qty.	1 ST	

... for tubular cable lugs

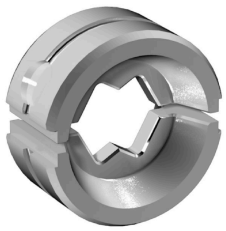

Crimping tools for cable lugs, connectors and wire-end ferrules with interchangeable inserts
- extremely fast processing thanks to hydraulic support
- large processing range up to 300 mm²
- 270° revolving quick-action crimping head
- automatic pressure limitation and monitoring via pressure sensor
- electronic control and monitoring of the crimping process
- Saving of all crimping cycles and error messages to internal memory
- Reading of all cycles and error messages via USB
- Li-ion rechargeable battery with charge status indicator: 18 V, 2 Ah

General ordering data

Type	ES EPG/HPG 60 WM 25	Version
Order No.	2469560000	Crimping tool insert, 25mm², WM crimp
GTIN (EAN)	4050118483840	
Qty.	1 ST	

Weidmüller Interface GmbH & Co. KG
Klingenbergstraße 26
D-32758 Detmold
Germany

www.weidmueller.com

Accessories

... for compression cable lugs

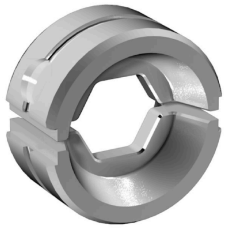

Crimping tools for cable lugs, connectors and wire-end ferrules with interchangeable inserts
- extremely fast processing thanks to hydraulic support
- large processing range up to 300 mm²
- 270° revolving quick-action crimping head
- automatic pressure limitation and monitoring via pressure sensor
- electronic control and monitoring of the crimping process
- Saving of all crimping cycles and error messages to internal memory
- Reading of all cycles and error messages via USB
- Li-ion rechargeable battery with charge status indicator: 18 V, 2 Ah

General ordering data

Type	ES EPG/HPG 60 HEX 25	Version
Order No.	2505180000	Crimping tool insert, 25mm², Hexagonal crimp
GTIN (EAN)	4050118519570	
Qty.	1 ST	

Tools

Crimping tools for cable lugs, connectors and wire-end ferrules with interchangeable inserts
- extremely fast processing thanks to hydraulic support
- large processing range up to 400 mm²
- 360° revolving quick action crimping head
- automatic pressure limitation and monitoring via pressure sensor
- Additional features for APG series:
- electronic control and monitoring of the crimping process
- Saving of all crimping cycles and error messages to internal memory
- Reading of all cycles and error messages via USB

General ordering data

Type	HPG 60	Version
Order No.	2453820000	6mm², 300mm², Hexagonal crimp, WM crimp, Indent crimp,
GTIN (EAN)	4050118468427	Trapezoidal crimp, Oval crimping
Qty.	1 ST	

Weidmüller Interface GmbH & Co. KG
Klingenbergstraße 26
D-32758 Detmold
Germany

www.weidmueller.com

Accessories

... for tubular cable lugs (acc. to EN 13600)

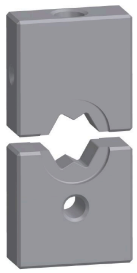

Crimping tools for cable lugs, connectors and wire-end ferrules with interchangeable inserts
- extremely fast processing thanks to hydraulic support
- large processing range up to 400 mm²
- 360° revolving quick action crimping head
- automatic pressure limitation and monitoring via pressure sensor
- Additional features for APG series:
- electronic control and monitoring of the crimping process
- Saving of all crimping cycles and error messages to internal memory
- Reading of all cycles and error messages via USB

General ordering data

Type	ES APG 80 WM 25	Version
Order No.	1502480000	25mm², WM crimp
GTIN (EAN)	4050118310634	
Qty.	1 ST	

... for compression cable lugs (acc. to DIN 46235)

Crimping tools for cable lugs, connectors and wire-end ferrules with interchangeable inserts
- extremely fast processing thanks to hydraulic support
- large processing range up to 400 mm²
- 360° revolving quick action crimping head
- automatic pressure limitation and monitoring via pressure sensor
- Additional features for APG series:
- electronic control and monitoring of the crimping process
- Saving of all crimping cycles and error messages to internal memory
- Reading of all cycles and error messages via USB

General ordering data

Type	ES APG 80 HEX 25	Version
Order No.	1502640000	25mm², Hexagonal crimp
GTIN (EAN)	4050118310573	
Qty.	1 ST	