Data sheet

SL-SMT 5.08HC/03/270GL 3.2AU BK BX CO

Weidmüller Interface GmbH & Co. KG
Klingenbergstraße 26
D-32758 Detmold
Germany

www.weidmueller.com

Product image

Similar to illustration

High-temperature-resistant, straight, open pin header. Packed in box or tape. On tape and with 1.5 mm solder pin, optimised for automatic assembly. 3.2 mm solder pin suitable for reflow and wave soldering. The pin headers provide space for labelling and can be coded. HC = High Current.

General ordering data

Version	PCB plug-in connector, male header, closed side, THT/THR solder connection, 5.08 mm, Number of poles: 3, 270°, Solder pin length (l): 3.2 mm, Au (Gold), black, Box
Order No.	1490870000
Type	SL-SMT 5.08HC/03/270GL 3.2AU BK BX CO
GTIN (EAN)	4050118300482
Qty.	100 items
Product data	IEC: 400 V / 27.5 A UL: / 18.5 A
Packaging	Box

SL-SMT 5.08HC/03/270GL 3.2AU BK BX CO

Weidmüller Interface GmbH & Co. KG
Klingenbergstraße 26
D-32758 Detmold
Germany

www.weidmueller.com

Technical data

Approvals

Approvals	
ROHS	Conform
UL File Number Search	UL Website
Certificate No. (UR)	E60693

Dimensions and weights

Depth	12 mm	Depth (inches)	0.4724 inch
Height	11.7 mm	Height (inches)	0.4606 inch
Height of lowest version	8.5 mm	Width	18.44 mm
Width (inches)	0.726 inch	Net weight	1.73 g

Environmental Product Compliance

RoHS Compliance Status	Compliant without exemption	
REACH SVHC	No SVHC above 0.1 wt%	
Product Carbon Footprint	Cradle to gate	0,018 kg CO2 eq.

System specifications

Product family	OMNIMATE Signal - series BL/SL 5.08	Type of connection	Board connection
Mounting onto the PCB	THT/THR solder connection	Pitch in mm (P)	5.08 mm
Pitch in inches (P)	0.200 "	Outgoing elbow	270°
Number of poles	3	Solder pin length (l)	3.2 mm
Solder pin length tolerance	0 / -0.3 mm	Solder pin dimensions	d = 1.2 mm, Octagonal
L1 in mm	10.16 mm	L1 in inches	0.400 "
Number of rows	1	Pin series quantity	1
Touch-safe protection acc. to DIN VDE 57 106	finger-safe unplugged/ back-of-hand-safe plugged	Touch-safe protection acc. to DIN VDE 0470	IP20 plugged/ IP10 unplugged
Protection degree	IP20	Volume resistance	≤5 mΩ
Plugging force/pole, max.	9 N	Pulling force/pole, max.	7 N

Material data

Insulating material	LCP GF	Colour	black
Colour chart (similar)	RAL 9011	Insulating material group	IIIa
Comparative Tracking Index (CTI)	≥ 175	Moisture Level (MSL)	1
Contact material	Cu-alloy	Contact surface	Au (Gold)
Layer structure of solder connection	1...3 µm Ni / 2...4 µm Sn matt	Layer structure of plug contact	1...3 µm Ni / 2...4 µm Sn / 1.7...2.3 µm Au
Storage temperature, min.	-40 °C	Storage temperature, max.	70 °C
Operating temperature, min.	-50 °C	Operating temperature, max.	100 °C
Temperature range, installation, min.	-30 °C	Temperature range, installation, max.	100 °C

Rated data acc. to IEC

tested acc. to standard	IEC 60664-1, IEC 61984	Rated current, min. number of poles (Tu=20°C)	27.5 A
Rated current, max. number of poles (Tu=20°C)	19 A	Rated current, min. number of poles (Tu=40°C)	24 A

SL-SMT 5.08HC/03/270GL 3.2AU BK BX CO

Weidmüller Interface GmbH & Co. KG
Klingenbergstraße 26
D-32758 Detmold
Germany

www.weidmueller.com

Technical data

Rated current, max. number of poles (Tu=40°C)	16.5 A	Rated voltage for surge voltage class / pollution degree II/2	400 V
Rated voltage for surge voltage class / pollution degree III/2	320 V	Rated impulse voltage for surge voltage class/ pollution degree II/2	4000 V
Rated impulse voltage for surge voltage class/ pollution degree III/2	4 kV		

Rated data acc. to CSA

Rated current (Use group B / CSA)	18.5 A	Rated current (Use group D / CSA)	18.5 A

Rated data acc. to UL 1059

Institute (UR)	UR	Certificate No. (UR)	E60693
Rated current (Use group B / UL 1059)	18.5 A	Reference to approval values	Specifications are maximum values, details - see approval certificate.

Packing

Packaging	Box	VPE length	117.00 mm
VPE width	103.00 mm	VPE height	65.00 mm

Important note

IPC conformity	Conformity: The products are developed, manufactured and delivered according international recognized standards and norms and comply with the assured properties in the data sheet resp. fulfill decorative properties in accordance with IPC-A-610 "Class 2". Further claims on the products can be evaluated on request.
Notes	• Gold-plated contact surfaces on request • Rated current related to rated cross-section & min. No. of poles. • Diameter of solder eyelet D = 1.4+0.1mm • Solder eyelet diameter D = 1.5 + 0.1 mm, from 9 poles • P on drawing = pitch • Rated data refer only to the component itself. Clearance and creepage distances to other components are to be designed in accordance with the relevant application standards. • In accordance with IEC 61984, OMNIMATE-connectors are connectors without breaking capacity (COC). During designated use, connectors are not allowed to be engaged or disengaged when live or under load • Long term storage of the product with average temperature of 50 °C and maximum humidity 70%, 36 months

Classifications

ETIM 8.0	EC002637	ETIM 9.0	EC002637
ETIM 10.0	EC002637	ECLASS 14.0	27-46-02-01
ECLASS 15.0	27-46-02-01		

SL-SMT 5.08HC/03/270GL 3.2AU BK BX CO

Weidmüller Interface GmbH & Co. KG
Klingenbergstraße 26
D-32758 Detmold
Germany

www.weidmueller.com

Drawings

Dimensional drawing

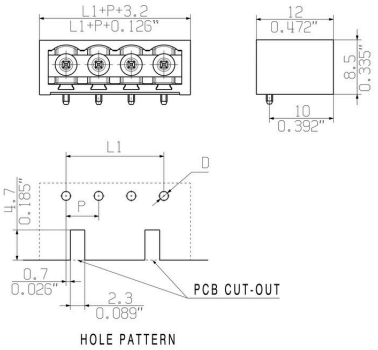

Product benefits

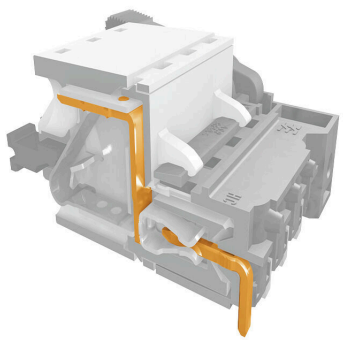

Safe power transmissionProven properties