Data sheet

RSM-4 24V+ BASE S

Weidmüller Interface GmbH & Co. KG
Klingenbergstraße 26
D-32758 Detmold
Germany

www.weidmueller.com

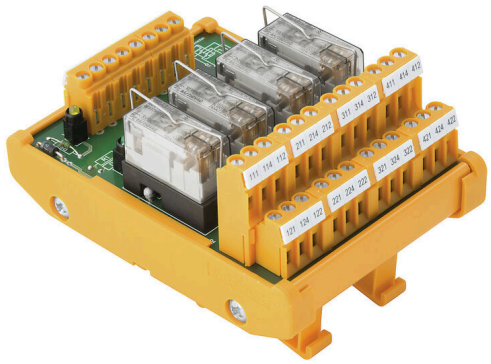

Similar to illustration

Relay bases (RSM) with common positive and negative to be connected to PLC or other type of controllers. The interfaces are made up of groups of 4, 8 or 16 RCL relays (12.7 mm) or RSS (6.1 mm). The connection to the controller can be set up using pluggable connectors or using direct cabling with IEC 60603-13 connectors. Wide range of options:

- 1 or 2 CO contacts with 16/8/6 A relays
- Voltages from 5 to 230 V
- Screw, tension clamp or PUSH IN connection
- Compatible with Weidmüller's solid-state relays

The range of relays provides galvanic isolation between input/output as well as between the adjacent contacts on the relays. This enables the various voltages in the controllers and those required by the various field elements to be safely adapted.

General ordering data

Version	Interface, RSM, Screw connection
Order No.	1457430000
Type	RSM-4 24V+ BASE S
GTIN (EAN)	4050118263664
Qty.	1 items
Delivery status	Discontinued

RSM-4 24V+ BASE S

Weidmüller Interface GmbH & Co. KG
Klingenbergstraße 26
D-32758 Detmold
Germany

www.weidmueller.com

Technical data

Approvals

Approvals	
ROHS	Conform
UL File Number Search	UL Website
Certificate No. (UR)	E141197

Dimensions and weights

Depth	51 mm	Depth (inches)	2.0079 inch
Height	87 mm	Height (inches)	3.4252 inch
Width	69 mm	Width (inches)	2.7165 inch
Net weight	64 g		

Temperatures

Storage temperature	-40...60 °C	Operating temperature	-25...50 °C

Environmental Product Compliance

RoHS Compliance Status	Compliant with exemption
RoHS Exemption (if applicable/known)	7a, 7cI
REACH SVHC	Lead 7439-92-1
SCIP	71d9bdc4-a0b5-4af0-93bd-2ad4e523fb14

Rated data UL

Rated current IN	16.7 mA	Operating temperature UL, min.	0 °C
Operating temperature UL, max.	25 °C	Rated voltage DC UN (supply)	24 V
Rated current (supply)	1 A	Rated voltage DC UN (input)	24 V
Rated voltage AC UN (output)	250 V	Rated current Imax (output)	4.6 A

General data

LED status display per relay	green	LED status of the supply voltage	yellow

Connection data

Connection (field side)	LL 5.08 mm	Connection on control side	LP 5.08 mm, LL 5.08 mm

Rating data

Mechanical service life	30 x 106 switching cycles

Ratings data input

Input voltage	24 V DC ± 10%	Input current	16.7 mA

Ratings data output

Relay type	RCL	Type of output	Potential-free contact
Material of contacts	AgNi 90/10	Rated voltage	≤ 250 V AC

RSM-4 24V+ BASE S

Weidmüller Interface GmbH & Co. KG
Klingenbergstraße 26
D-32758 Detmold
Germany

www.weidmueller.com

Technical data

Max. AC continuous current	6 A	Minimum contact current	0.1 A
Minimum contact voltage	5 V		

Insulation coordination (EN50178)

Pollution severity level	2	Pulse voltage test (1,2/50µs)	6 kV
Insulation test voltage AC	1.2 kV		

Insulation coordinates (EN50178)

Rated input insulation voltage	<50 V AC	Rated output insulation voltage	250 V AC
Overvoltage category input/output	III	Overvoltage category output/output	II
Pollution severity level	2	Pulse voltage test (1,2/50µs)	6 kV
Insulation test voltage AC	1.2 kV	Clearance input/output	≥ 5.5 mm

Connection field

Min. wire cross-section, AWG	AWG 26	Type of connection	Screw connection
Sleeve with plastic collar, max.	2.5 mm²	Flexible with sleeve, min.	0.5 mm²
Flexible with sleeve, max.	2.5 mm²	Flexible, max. H05(07) V-K	4 mm²
Flexible, min. H05(07) V-K	0.5 mm²	Solid, max. H05(07) V-U	6 mm²
Solid, min. H05(07) V-U	0.5 mm²	Stripping length	6 mm
Tightening torque, max.	0.6 Nm	Tightening torque, min.	0.5 Nm
Clamping range, max.	6 mm²	Clamping range, min.	0.5 mm²
Max. wire cross-section, AWG	AWG 12		

Classifications

ETIM 8.0	EC002780	ETIM 9.0	EC002780
ETIM 10.0	EC002780	ECLASS 14.0	27-14-11-52
ECLASS 15.0	27-14-11-52		

RSM-4 24V+ BASE S

Weidmüller Interface GmbH & Co. KG
Klingenbergstraße 26
D-32758 Detmold
Germany

www.weidmueller.com
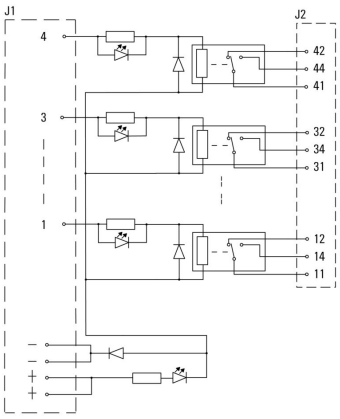
Drawings