Data sheet

IE-FCM-USB-3.0-A

Weidmüller Interface GmbH & Co. KG
Klingenbergstraße 26
D-32758 Detmold
Germany

www.weidmueller.com

Service interface FrontCom® Micro with USB in IP65

General ordering data

Version	FrontCom Micro USB coupling, USB 3.0, Type A
Order No.	1427960000
Type	IE-FCM-USB-3.0-A
GTIN (EAN)	4050118232318
Qty.	10 items

IE-FCM-USB-3.0-A

Weidmüller Interface GmbH & Co. KG
Klingenbergstraße 26
D-32758 Detmold
Germany

www.weidmueller.com

Technical data

Approvals

Approvals	c UL us LISTED
ROHS	Conform
UL File Number Search	UL Website
Certificate no. (cULus)	E316369

Dimensions and weights

Depth	42.9 mm	Depth (inches)	1.689 inch
Height	44 mm	Height (inches)	1.7323 inch
Width	29.5 mm	Width (inches)	1.1614 inch
Wall thickness, min.	1 mm	Wall thickness, max.	5 mm
Net weight	18.55 g		

Temperatures

Storage temperature		Operating temperature	-40 °C...70 °C
Installation temperature			

Environmental Product Compliance

RoHS Compliance Status	Compliant without exemption
REACH SVHC	No SVHC above 0.1 wt%

General Info

Connection 1	USB A	Connection 2	USB A
Description of article	FrontCom Micro USB coupling, USB 3.0	Wiring	Type A
Colour	black	Housing main material	PA UL 94 V0
Contact surface	Gold over nickel	Type of mounting	Cabinet, Distribution box
Shielding material	Stainless steel, rust-proof, nickel-plated	Shielding	360° shield contact
Protection degree	IP65, in closed state	Plugging cycles	≥ 1500

Electrical properties

Contact resistance	≤ 30 mΩ	Insulation resistance	≥ 1000 MΩ

General standards

Connector standard	IEC 61076-3-107	UL standard for communication accessories	UL 1863
Certificate no. (cULus)	E316369		

Classifications

ETIM 8.0	EC001031	ETIM 9.0	EC001031
ETIM 10.0	EC001031	ECLASS 14.0	27-18-28-92
ECLASS 15.0	27-18-28-92		

Weidmüller Interface GmbH & Co. KG
Klingenbergstraße 26
D-32758 Detmold
Germany

www.weidmueller.com

Drawings

Dimensioned drawing

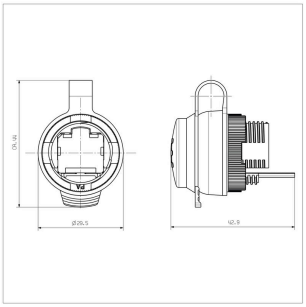

Installation cut-out

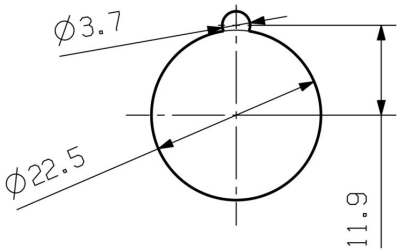

Weidmüller Interface GmbH & Co. KG
Klingenbergstraße 26
D-32758 Detmold
Germany

www.weidmueller.com

Accessories

IE fastening tool

The mounting tool helps you to tighten the locknut when mounting the flange of version 04.
Comments:
- Standard tool
- made from tough plastic

General ordering data

Type	IE-FISP-V4	Version
Order No.	9204370000	Mounting tool
GTIN (EAN)	4032248660780	
Qty.	2 ST	

Blank

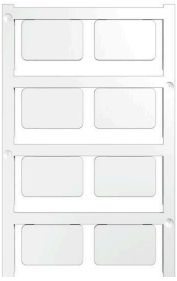

SM is a MultiCard marker for labelling control and signalling devices. The tags are clipped into the carriers or attached by means of the adhesive film already fitted to them. Customised tags can be created with the PrintJet CONNECT or Plotter marking systems.
- Users can quickly produce tags to suit their needs
- No need to stock expensive standard tags
- Highly resistant printing quality when using the PrintJet as a substitute for engraving
- For extreme demands, we recommend the ETO SM protective film
- Holders can be used for the 22-mm or 30-mm-diameter push-buttons from Siemens, ABB, Moeller and Télémécanique

For custom printing: Please send us a file of our labeling software M-Print PRO or M-Print PRO Online (without installation) for your labeling specifications.

General ordering data

Type	SM 27/18 MC NE WS	Version
Order No.	1699860000	SwitchMark, Device markers, 18 x 27 mm, SwitchMark holder, white
GTIN (EAN)	4008190892302	
Qty.	80 ST	

Weidmüller Interface GmbH & Co. KG
Klingenbergstraße 26
D-32758 Detmold
Germany

www.weidmueller.com

Accessories

Complementary products

SM is a MultiCard marker for labelling control and signalling devices. The tags are clipped into the carriers or attached by means of the adhesive film already fitted to them. Customised tags can be created with the PrintJet CONNECT or Plotter marking systems.

- Users can quickly produce tags to suit their needs
- No need to stock expensive standard tags
- Highly resistant printing quality when using the PrintJet as a substitute for engraving
- For extreme demands, we recommend the ETO SM protective film
- Holders can be used for the 22-mm or 30-mm-diameter push-buttons from Siemens, ABB, Moeller and Télémécanique

For custom printing: Please send us a file of our labeling software M-Print PRO or M-Print PRO Online (without installation) for your labeling specifications.

General ordering data

Type	SM-H 27/18 SW	Version
Order No.	1716630000	SwitchMark, Accessories, 48 x 27 mm, black
GTIN (EAN)	4008190343194	
Qty.	25 ST	

Blank

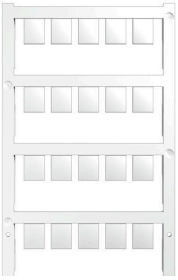

ESG is the tried-and-tested marker in MultiCard format for use on many well-known electrical devices. The result is high-quality device marking with a high-contrast appearance.
Various types are available for devices from manufacturers like Siemens, ABB, Beckhoff etc.
Advantages at a glance:

- Tags for universal usage, self-adhesive or clip-on tags, depending on type
- For aligned equipment, e.g. circuit breakers, we supply ESG markers for clipping onto tag rails
- Individual laser-quality printing according to specifications

For custom printing: Please send us a file of our labeling software M-Print PRO or M-Print PRO Online (without installation) for your labeling specifications.

General ordering data

Type	ESG 9/11 K MC NE WS	Version
Order No.	1857440000	ESG, Device markers x 11 mm, PA 66, Colour: white, Self-adhesive
GTIN (EAN)	4032248402731	
Qty.	200 ST	

IE-FCM-USB-3.0-A

Weidmüller Interface GmbH & Co. KG
Klingenbergstraße 26
D-32758 Detmold
Germany

www.weidmueller.com

Accessories

Cable-lug sleeves

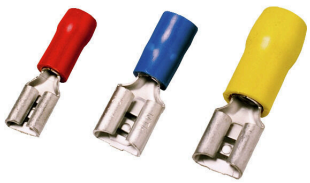

Insulated tab-connector sleeves made from PVC with copper sleeve
- Commercially available designs
- Not soldered
- With conical entry funnel

General ordering data

Type	LIF 1,5F288 R	Version
Order No.	9200520000	cable lug, terminal end,Insulated cable connector,1.5 mm²,0.5 mm² -
GTIN (EAN)	4032248410361	1.5 mm²,red
Qty.	100 ST	