Data sheet

TBY-SDV144-F-PS-2KB-Z

Weidmüller Interface GmbH & Co. KG
Klingenbergstraße 26
D-32758 Detmold
Germany

www.weidmueller.com

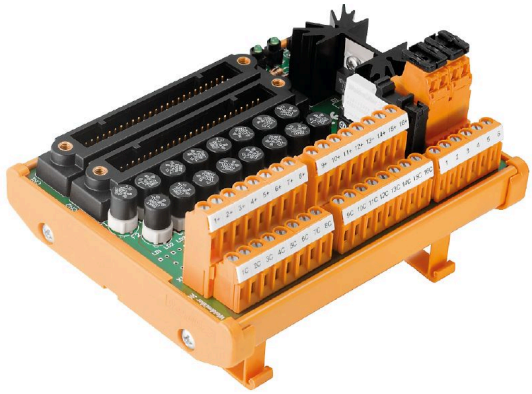

Digital interfaces are equipped with 50-pole connectors (KS) and offer numerous advantages, such as:

- Redundancy: the interfaces have 2 50-pole (AKB) connectors for redundancy purposes.
- Many of the interfaces activate a relay to indicate if one of the two possible power sources has dropped below a value of approximately 12 V.
- The cards can be mounted via tension clamp or screw connection.
- Multiple functions are integrated: isolators, fuses with status indicator, relay and status LEDs.

General ordering data

Version	Interface, RS, 2 x AKB (50P), LM2NZF 5.08mm
Order No.	1395380000
Type	TBY-SDV144-F-PS-2KB-Z
GTIN (EAN)	4050118207224
Qty.	1 items

TBY-SDV144-F-PS-2KB-Z

Weidmüller Interface GmbH & Co. KG
Klingenbergstraße 26
D-32758 Detmold
Germany

www.weidmueller.com

Technical data

Approvals

Approvals	CE
ROHS	Conform

Dimensions and weights

Depth	80 mm	Depth (inches)	3.1496 inch
Height	109 mm	Height (inches)	4.2913 inch
Width	134 mm	Width (inches)	5.2756 inch
Net weight	286.87 g		

Temperatures

Storage temperature	-40...85 °C	Operating temperature	-25...70 °C

Environmental Product Compliance

RoHS Compliance Status	Compliant with exemption
RoHS Exemption (if applicable/known)	6c, 7cI
REACH SVHC	Lead 7439-92-1
SCIP	7b305775-bf96-40a0-9bb6-8abdb4644a87

General data

LED status display per channel	No	Disconnection per channel	No
Type of test point	No	Contactor	No
Fuse per channel	100 mA	LED status of the supply voltage	green
Power supply fuse	2 A		

Connection data

Number of poles (control side)	50-pole plug	Connection (field side)	LM2NZF 5.08mm
Connection on control side	2 x AKB (50P)		

Ratings data

Operating voltage	24 V DC	Max. current per channel	1 A
Total operating current	1 A		

Insulation coordination (EN50178)

Rated insulation voltage	< 50 V AC	Surge voltage category	III
Pollution severity level	2	Pulse voltage test (1,2/50µs)	0.8 kV
Insulation test voltage AC	0.35 kV		

Connection field

Min. wire cross-section, AWG	AWG 24	Type of connection	Tension-clamp connection
Sleeve with plastic collar, max.	1.5 mm²	Flexible with sleeve, min.	0.25 mm²
Flexible with sleeve, max.	1.5 mm²	Flexible, max. H05(07) V-K	1.5 mm²
Flexible, min. H05(07) V-K	0.2 mm²	Solid, max. H05(07) V-U	2.5 mm²
Solid, min. H05(07) V-U	0.2 mm²	Stripping length	7.5 mm
Clamping range, max.	2.5 mm²	Clamping range, min.	0.13 mm²

TBY-SDV144-F-PS-2KB-Z

Weidmüller Interface GmbH & Co. KG
Klingenbergstraße 26
D-32758 Detmold
Germany

www.weidmueller.com

Technical data

Max. wire cross-section, AWG	AWG 14		

Supply connection

Type of connection	Tension-clamp connection	Clamping range, min.	0.13 mm²
Clamping range, max.	2.5 mm²	Solid, min. H05(07) V-U	0.2 mm²
Solid, max. H05(07) V-U	2.5 mm²	Flexible, min. H05(07) V-K	0.2 mm²
Flexible, max. H05(07) V-K	1.5 mm²	Flexible with sleeve, max.	1.5 mm²
Flexible with sleeve, min.	0.25 mm²	Ferrule with plastic collar, max.	1.5 mm²
Wire cross-section, min. AWG	AWG 14	Wire cross-section, max. AWG	AWG 24
Stripping length	7.5 mm		

Classifications

ETIM 8.0	EC002780	ETIM 9.0	EC002780
ETIM 10.0	EC002780	ECLASS 14.0	27-14-11-52
ECLASS 15.0	27-14-11-52		

TBY-SDV144-F-PS-2KB-Z

Weidmüller Interface GmbH & Co. KG
Klingenbergstraße 26
D-32758 Detmold
Germany

www.weidmueller.com
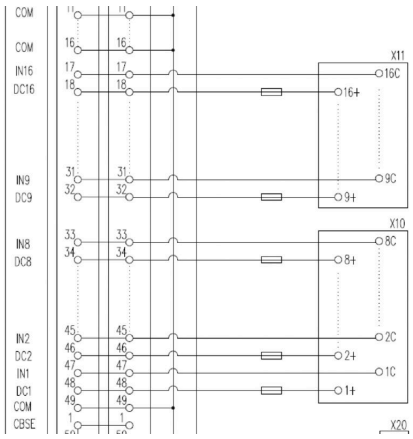
Drawings