Data sheet

BLL 3.50/06/180 3.2SN OR TU

Weidmüller Interface GmbH & Co. KG
Klingenbergstraße 26
D-32758 Detmold
Germany

www.weidmueller.com

Product image

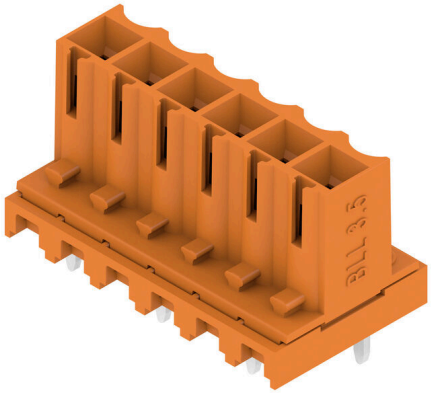

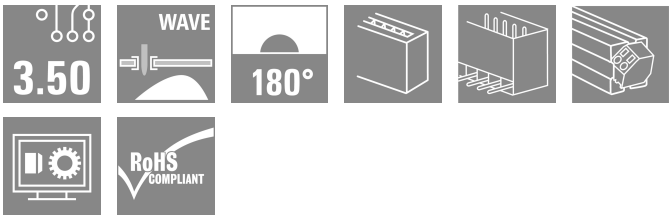

Inverted female header for:
- finger-safety on the PCB
- Board-to-board component connection (with SL/SL-SMT 3.50)
- Wave soldering
- Outlet direction: 180° (standing, vertical to PCB)

General ordering data

Version	PCB plug-in connector, female header, closed side, THT solder connection, 3.50 mm, Number of poles: 6, 180°, Solder pin length (l): 3.2 mm, tinned, orange, Tube
Order No.	1376430000
Type	BLL 3.50/06/180 3.2SN OR TU
GTIN (EAN)	4050118177848
Qty.	25 items
Product data	IEC: 320 V / 15.1 A UL: 300 V / 9 A
Packaging	Tube

BLL 3.50/06/180 3.2SN OR TU

Weidmüller Interface GmbH & Co. KG
Klingenbergstraße 26
D-32758 Detmold
Germany

www.weidmueller.com

Technical data

Approvals

Approvals	
ROHS	Conform
UL File Number Search	UL Website
Certificate No. (cURus)	E60693

Dimensions and weights

Depth	11.85 mm	Depth (inches)	0.4665 inch
Height	14.3 mm	Height (inches)	0.563 inch
Net weight	2.18 g		

Environmental Product Compliance

RoHS Compliance Status	Compliant without exemption
REACH SVHC	No SVHC above 0.1 wt%

System specifications

Product family	OMNIMATE Signal - series BL/SL 3.50	Type of connection	Board connection
Mounting onto the PCB	THT solder connection	Pitch in mm (P)	3.50 mm
Pitch in inches (P)	0.138 "	Outgoing elbow	180°
Number of poles	6	Number of solder pins per pole	1
Solder pin length (l)	3.2 mm	Solder pin length tolerance	+0.2 / -0.2 mm
Solder pin dimensions	d = 0.8 mm	Solder pin dimensions = d tolerance	0 / -0,03 mm
Solder eyelet hole diameter (D)	1.3 mm	Solder eyelet hole diameter tolerance (D)	+ 0,1 mm
L1 in mm	17.50 mm	L1 in inches	0.689 "
Number of rows	1	Pin series quantity	1
Touch-safe protection acc. to DIN VDE 57 106	Safe from finger touch	Touch-safe protection acc. to DIN VDE 0470	IP20 plugged/ IP10 unplugged
Protection degree	IP20	Volume resistance	≤5 mΩ
Can be coded	Yes	Plugging force/pole, max.	8 N
Pulling force/pole, max.	7 N		

Material data

Insulating material	PBT	Colour	orange
Colour chart (similar)	RAL 2000	Insulating material group	IIIa
Comparative Tracking Index (CTI)	≥ 200	Moisture Level (MSL)	
UL 94 flammability rating	V-0	Contact material	Cu-alloy
Contact surface	tinned	Layer structure of solder connection	4...6 µm Sn glossy
Layer structure of plug contact	4...6 µm Sn glossy	Storage temperature, min.	-40 °C
Storage temperature, max.	70 °C	Operating temperature, min.	-50 °C
Operating temperature, max.	100 °C	Temperature range, installation, min.	-25 °C
Temperature range, installation, max.	100 °C		

Rated data acc. to IEC

tested acc. to standard	IEC 60664-1, IEC 61984	Rated current, min. number of poles (Tu=20°C)	15.1 A
Rated current, max. number of poles (Tu=20°C)	7.7 A	Rated current, min. number of poles (Tu=40°C)	13 A

BLL 3.50/06/180 3.2SN OR TU

Weidmüller Interface GmbH & Co. KG
Klingenbergstraße 26
D-32758 Detmold
Germany

www.weidmueller.com

Technical data

Rated current, max. number of poles (Tu=40°C)	6.6 A	Rated voltage for surge voltage class / pollution degree II/2	320 V
Rated voltage for surge voltage class / pollution degree III/2	160 V	Rated voltage for surge voltage class / pollution degree III/3	160 V
Rated impulse voltage for surge voltage class/ pollution degree II/2	2.5 kV	Rated impulse voltage for surge voltage class/ pollution degree III/2	2.5 kV
Rated impulse voltage for surge voltage class/ contamination degree III/3	2.5 kV	Short-time withstand current resistance	3 x 1s with 100 A

Rated data acc. to CSA

Institute (CSA)	CSA	Certificate No. (CSA)	200039-1121690
Rated voltage (Use group C / CSA)	300 V	Rated current (Use group C / CSA)	9 A
Reference to approval values	Specifications are maximum values, details - see approval certificate.		

Rated data acc. to UL 1059

Institute (cURus)	CURUS	Certificate No. (cURus)	E60693
Rated voltage (Use group B / UL 1059)	300 V	Rated voltage (Use group D / UL 1059)	300 V
Rated current (Use group B / UL 1059)	9 A	Rated current (Use group D / UL 1059)	9 A
Reference to approval values	Specifications are maximum values, details - see approval certificate.		

Packing

Packaging	Tube	VPE length	554.00 mm
VPE width	21.00 mm	VPE height	16.00 mm
Surface resistance	Rs = 109 - 1012 Ω		

Important note

IPC conformity	Conformity: The products are developed, manufactured and delivered according international recognized standards and norms and comply with the assured properties in the data sheet resp. fulfill decorative properties in accordance with IPC-A-610 "Class 2". Further claims on the products can be evaluated on request.
Notes	• Additional variants on request • Gold-plated contact surfaces on request • Rated current related to rated cross-section & min. No. of poles. • P on drawing = pitch • Rated data refer only to the component itself. Clearance and creepage distances to other components are to be designed in accordance with the relevant application standards. • In accordance with IEC 61984, OMNIMATE-connectors are connectors without breaking capacity (COC). During designated use, connectors are not allowed to be engaged or disengaged when live or under load • Long term storage of the product with average temperature of 50 °C and maximum humidity 70%, 36 months

Classifications

ETIM 8.0	EC002637	ETIM 9.0	EC002637
ETIM 10.0	EC002637	ECLASS 14.0	27-46-02-01
ECLASS 15.0	27-46-02-01		

BLL 3.50/06/180 3.2SN OR TU

Weidmüller Interface GmbH & Co. KG
Klingenbergstraße 26
D-32758 Detmold
Germany

www.weidmueller.com

Drawings

Product image

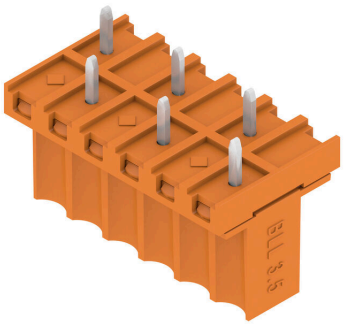

Dimensional drawing

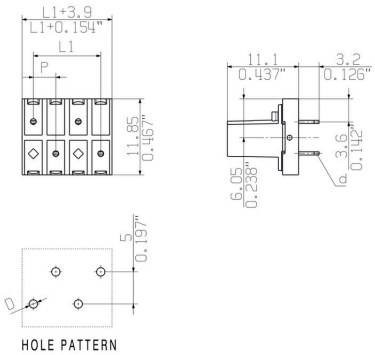

Product benefits

Connection made easySafe board-to-board connection