Data sheet

# SLAD 24/6/180 3.2SN OR

**Weidmüller Interface GmbH & Co. KG**
Klingenbergstraße 26
D-32758 Detmold
Germany

www.weidmueller.com

Do not use product for new developments

## Product image

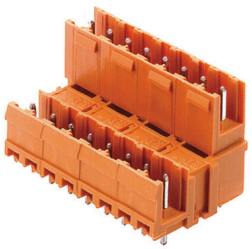

Similar to illustration

Dimensionally stable, straight, codable 2-tier male connector from the Unimate range of plugs with integral aid to prevent wrong connections. Available with open or closed sides. Fixing blocks can be attached to the closed version. The solder pin length of 3.2 mm has been optimised for wave soldering. Supplied in cardboard box.

## General ordering data

| | |
|---|---|
| Version | PCB plug-in connector, male header, open side, THT solder connection, 5.08 mm, Number of poles: 24, 180°, Solder pin length (l): 3.2 mm, tinned, orange, Box |
| Order No. | 1375360000 |
| Type | SLAD 24/6/180 3.2SN OR |
| GTIN (EAN) | 4008190074487 |
| Qty. | 10 items |
| Product data | IEC: 400 V / 10 A<br>UL: 300 V / 10 A |
| Packaging | Box |
| Delivery status | Discontinued |
| Available until | 2024-09-30T00:00:00+02:00 |

Creation date 01.03.2026 12:41:49 MEZ

# Data sheet

## SLAD 24/6/180 3.2SN OR

**Weidmüller Interface GmbH & Co. KG**
Klingenbergstraße 26
D-32758 Detmold
Germany

www.weidmueller.com

# Technical data

### Approvals

| | |
|---|---|
| Approvals |  |
| ROHS | Conform |
| UL File Number Search | UL Website |
| Certificate No. (UR) | E60693 |

### Dimensions and weights

| | |
|---|---|
| Net weight | 19.8 g |

### Environmental Product Compliance

| | |
|---|---|
| RoHS Compliance Status | Compliant without exemption |
| REACH SVHC | No SVHC above 0.1 wt% |

### System specifications

| | | | |
|---|---|---|---|
| Product family | OMNIMATE Signal - series BLA/SLA 5.08 | Type of connection | Board connection |
| Mounting onto the PCB | THT solder connection | Pitch in mm (P) | 5.08 mm |
| Pitch in inches (P) | 0.200 " | Outgoing elbow | 180° |
| Number of poles | 24 | Number of solder pins per pole | 1 |
| Solder pin length (l) | 3.2 mm | Solder pin dimensions | d = 1.2 mm, Octagonal |
| Solder eyelet hole diameter (D) | 1.3 mm | Solder eyelet hole diameter tolerance (D) | + 0,1 mm |
| L1 in mm | 55.88 mm | L1 in inches | 2.200 " |
| Number of rows | 2 | Pin series quantity | 2 |
| Touch-safe protection acc. to DIN VDE 57 106 | finger-safe unplugged/ back-of-hand-safe plugged | Touch-safe protection acc. to DIN VDE 0470 | IP20 plugged/ IP10 unplugged |
| Volume resistance | 9.00 mΩ | Can be coded | Yes |
| Plugging cycles | 25 | Pulling force/pole, max. | 2 N |

### Material data

| | | | |
|---|---|---|---|
| Insulating material | PBT GF | Colour | orange |
| Colour chart (similar) | RAL 2000 | Insulating material group | IIIa |
| Comparative Tracking Index (CTI) | ≥ 200 | Moisture Level (MSL) | |
| UL 94 flammability rating | V-0 | Contact material | Cu-alloy |
| Contact surface | tinned | Storage temperature, min. | -40 °C |
| Storage temperature, max. | 70 °C | Operating temperature, min. | -50 °C |
| Operating temperature, max. | 120 °C | Temperature range, installation, min. | -25 °C |
| Temperature range, installation, max. | 120 °C | | |

### Rated data acc. to IEC

| | | | |
|---|---|---|---|
| tested acc. to standard | IEC 60664-1, IEC 61984 | Rated current, min. number of poles (Tu=20°C) | 10 A |
| Rated current, max. number of poles (Tu=20°C) | 7 A | Rated current, min. number of poles (Tu=40°C) | 8.5 A |
| Rated current, max. number of poles (Tu=40°C) | 6 A | Rated voltage for surge voltage class / pollution degree II/2 | 400 V |
| Rated voltage for surge voltage class / pollution degree III/2 | 320 V | Rated voltage for surge voltage class / pollution degree III/3 | 250 V |

# SLAD 24/6/180 3.2SN OR

**Weidmüller Interface GmbH & Co. KG**
Klingenbergstraße 26
D-32758 Detmold
Germany

www.weidmueller.com

## Technical data

| | | | |
|---|---|---|---|
| Rated impulse voltage for surge voltage class/ pollution degree II/2 | 4 kV | Rated impulse voltage for surge voltage class/ pollution degree III/2 | 4 kV |
| Rated impulse voltage for surge voltage class/ contamination degree III/3 | 4 kV | Short-time withstand current resistance | 3 x 1s with 70 A |

### Rated data acc. to CSA

| | | | |
|---|---|---|---|
| Institute (CSA) | CSA | Certificate No. (CSA) | 12400-158 |
| Rated voltage (Use group B / CSA) | 300 V | Rated voltage (Use group D / CSA) | 300 V |
| Rated current (Use group B / CSA) | 7 A | Rated current (Use group D / CSA) | 7 A |
| Reference to approval values | Specifications are maximum values, details - see approval certificate. | | |

### Rated data acc. to UL 1059

| | | | |
|---|---|---|---|
| Institute (UR) | UR | Certificate No. (UR) | E60693 |
| Rated voltage (Use group B / UL 1059) | 300 V | Rated voltage (Use group D / UL 1059) | 300 V |
| Rated current (Use group B / UL 1059) | 10 A | Rated current (Use group D / UL 1059) | 10 A |
| Reference to approval values | Specifications are maximum values, details - see approval certificate. | | |

### Packing

| | | | |
|---|---|---|---|
| Packaging | Box | VPE length | 151.00 mm |
| VPE width | 133.00 mm | VPE height | 37.00 mm |

### Important note

| | |
|---|---|
| IPC conformity | Conformity: The products are developed, manufactured and delivered according international recognized standards and norms and comply with the assured properties in the data sheet resp. fulfill decorative properties in accordance with IPC-A-610 "Class 2". Further claims on the products can be evaluated on request. |
| Notes | • Additional variants on request<br>• Rated current related to rated cross-section & min. No. of poles.<br>• Spacing between rows: see hole layout<br>• P on drawing = pitch<br>• Rated data refer only to the component itself. Clearance and creepage distances to other components are to be designed in accordance with the relevant application standards.<br>• In accordance with IEC 61984, OMNIMATE-connectors are connectors without breaking capacity (COC). During designated use, connectors are not allowed to be engaged or disengaged when live or under load<br>• Long term storage of the product with average temperature of 50 °C and maximum humidity 70%, 36 months |

### Classifications

| | | | |
|---|---|---|---|
| ETIM 8.0 | EC002637 | ETIM 9.0 | EC002637 |
| ETIM 10.0 | EC002637 | ECLASS 14.0 | 27-46-02-01 |
| ECLASS 15.0 | 27-46-02-01 | | |

# SLAD 24/6/180 3.2SN OR

**Weidmüller Interface GmbH & Co. KG**
Klingenbergstraße 26
D-32758 Detmold
Germany

www.weidmueller.com

## Drawings

### Dimensional drawing

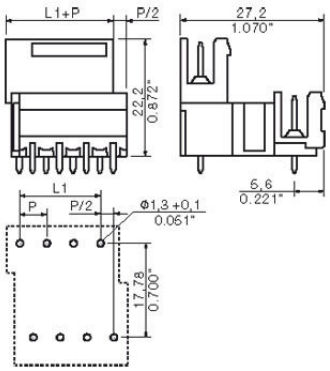

# SLAD 24/6/180 3.2SN OR

**Weidmüller Interface GmbH & Co. KG**
Klingenbergstraße 26
D-32758 Detmold
Germany

www.weidmueller.com

## Accessories

### Blocks for PCB mounting



Minor component, major effect:
Clip-on attachment elements increase the mechanical resilience of the whole plug connection by
- securing the male connectors to the circuit board
- providing a vibration-proof connection between the sockets and the male connectors

Clip-on or pre-assembled - always the right solution:
- Hard-wearing, precise fitting dovetail joint
- Hard-wearing metal threaded inserts
- Suitable for all outlet directions

Maximum stability, minimum effort:
- Extremely resilient for frequent fastening operations
- Complete set for easy selection

The result: soldering points, contacts and overall module are more resilient against mechanical stress such as vibrations and tensile loads.

#### General ordering data

| | | |
|---|---|---|
| Type | SLA BB14 SW | Version |
| Order No. | 1774460000 | PCB plug-in connector, Accessories, Mounting block, black, Number |
| GTIN (EAN) | 4032248148813 | of poles: 1 |
| Qty. | 20 ST | |

### Coding elements



Only connects what is supposed to be connected: the right connection at the right place.
Coding elements and locking devices clearly assign connecting elements during the manufacturing process and operation
The coding elements and locking devices are inserted prior to assembly or during the cable assembly phase.
The Weidmüller alternative: configure online using the variant configurator to precode prior to delivery.
Incorrect assembly on the circuit board and incorrect plugging of connecting elements is no longer possible.
The advantage: no troubleshooting during manufacture and no operational errors by the user.

#### General ordering data

| | | |
|---|---|---|
| Type | SLA KO | Version |
| Order No. | 1323560000 | PCB plug-in connector, Accessories, Coding element, white, Number |
| GTIN (EAN) | 4008190428389 | of poles: 1 |
| Qty. | 100 ST | |

# SLAD 24/6/180 3.2SN OR

**Weidmüller Interface GmbH & Co. KG**
Klingenbergstraße 26
D-32758 Detmold
Germany

www.weidmueller.com

## Accessories

### Blocks for PCB mounting



Minor component, major effect:
Clip-on attachment elements increase the mechanical resilience of the whole plug connection by
- securing the male connectors to the circuit board
- providing a vibration-proof connection between the sockets and the male connectors

Clip-on or pre-assembled - always the right solution:
- Hard-wearing, precise fitting dovetail joint
- Hard-wearing metal threaded inserts
- Suitable for all outlet directions

Maximum stability, minimum effort:
- Extremely resilient for frequent fastening operations
- Complete set for easy selection

The result: soldering points, contacts and overall module are more resilient against mechanical stress such as vibrations and tensile loads.

### General ordering data

| | | |
|---|---|---|
| Type | SLA BB14 OR | Version |
| Order No. | 1594200000 | PCB plug-in connector, Accessories, Mounting block, orange, Number |
| GTIN (EAN) | 4008190184988 | of poles: 0 |
| Qty. | 20 ST | |