Data sheet

KLIPPON POK 254016

Weidmüller Interface GmbH & Co. KG
Klingenbergstraße 26
D-32758 Detmold
Germany

www.weidmueller.com

The Klippon® POK enclosure range is made from a high-quality glass fibre reinforced polyester and is ideal for applications and environments where corrosion resistance, impact resistance and a high IP protection class are a requirement.
Key features of the extensive product range:

- Available in 17 sizes
- Two standard finishes (colours): grey (similar to RAL 7001 for industrial use) and black (similar to RAL 9011 for harsh environments, Ex)
- Cover with stainless steel screws in cross-head / slotted design
- Moulded gasket made of silicone or chloroprene
- Fixing holes outside the sealed area to ensure high ingress protection of IP66
- Impact resistance up to 7 Joules
- Mounting directly in the enclosure or using an internal mounting plate
- Direct wall mounting possible using fixing holes or mounting feet
- Fastening thread to attach mounting rails and plates
- Up to E60 fire rating dependent on the configuration
- Weidmüller can manufacture and supply this enclosure to match customer specifications - fitted with all necessary terminals and cable glands.

General ordering data

Version	Klippon POK (polyester empty enclosure), Empty enclosure, Height: 250 mm, Width: 400 mm, Depth: 160.5 mm, Basic material: Glass fibre-reinforced polyester, untreated, polished, Silver grey
Order No.	1305990000
Type	KLIPPON POK 254016
GTIN (EAN)	4050118108422
Qty.	1 items

KLIPPON POK 254016

Weidmüller Interface GmbH & Co. KG
Klingenbergstraße 26
D-32758 Detmold
Germany

www.weidmueller.com

Technical data

Approvals

Approvals	
ROHS	Conform
UL File Number Search	UL Website
Certificate no. (cULus)	E256877

Dimensions and weights

Depth	160.5 mm	Depth (inches)	6.3189 inch
Height	250 mm	Height (inches)	9.8425 inch
Height of lowest version	160.5 mm	Width	400 mm
Width (inches)	15.748 inch	Mounting dimension - height	200 mm
Mounting dimension - width	380 mm	Net weight	4390 g

Temperatures

Operating temperature	-40 °C...100 °C

Environmental Product Compliance

RoHS Compliance Status	Compliant with exemption
RoHS Exemption (if applicable/known)	6c
REACH SVHC	Lead 7439-92-1
SCIP	afb385d0-c52b-4449-8502-203596817ab0

Cable glands, left

M12	32	M50	2
M16	21	M32	3
M25	8	M20	15
M40	3		

Cable glands, right

M25	8	M16	21
M40	3	M50	2
M32	3	M20	15
M12	32		

Cable glands, top/bottom

M20	33	M12	62
M40	6	M32	14
M25	18	M50	4
M16	54		

Certificate numbers enclosure

Declaration of Conformatiy No. (DoC LVD)	DE PS2401 160412 001ISS02	Certificate No. (DNV)	TAE00002R2
Approval conditions	cULus, LR, DNV	Certificate no. (cULus)	E256877

KLIPPON POK 254016

Weidmüller Interface GmbH & Co. KG
Klingenbergstraße 26
D-32758 Detmold
Germany

www.weidmueller.com

Technical data

General information

Material thickness of cover	5.8 mm	Material thickness of enclosure	5.99 mm
Operating temperature, max.	100 °C	Operating temperature, min.	-40 °C
UL 94 flammability rating	V-0	Lid attachment	Slotted/Phillips screws
Standards	DIN EN 62208 - Empty enclosure standard, DIN 4102-12	Surface finish	untreated, polished
Impact resistance	5 J version standard	Protection degree	IP66
Basic material	Glass fibre-reinforced polyester	Seal material	Chloroprene
Torque for lid screws	2.5 Nm	Enclosure attachment	Installation through the housing rear wall, Fixing lugs
Protection class (UL)	Type 4, Type 4X	Number of lid screws	4
Access opening: width	388.02 mm	Required tool	SDK PZ2
Flange plate	No	Max. payload	40 kg
Lid	Yes	Access opening: height	238.02 mm
Areas of use	Harbour facilities, Machine construction, Process industry, Transportation		

horizontal assembly

WDU 10 / ZDU 10	2x33	WDU 16 / ZDU 16	2x27
WDU 2,5 / ZDU 2,5 / IDU 2,5	2x67	WDU 4 / ZDU 4	2x55
WDU 6 / ZDU 6	2x41		

vertical assembly

WDU 2,5 / ZDU 2,5 / IDU 2,5	*	WDU 4 / ZDU 4	*

Important note

Product information	The fire rating up to E60 acc. to DIN 4102-12 depends on concrete configurations / installations (details see “Declaration of Manufacturer” in “Downloads”)

Classifications

ETIM 8.0	EC000261	ETIM 9.0	EC000261
ETIM 10.0	EC000261	ECLASS 14.0	27-18-01-01
ECLASS 15.0	27-18-01-01		

KLIPPON POK 254016

Weidmüller Interface GmbH & Co. KG
Klingenbergstraße 26
D-32758 Detmold
Germany

www.weidmueller.com

Drawings

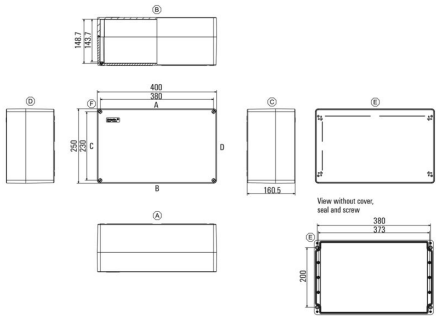

KLIPPON POK 254016

Weidmüller Interface GmbH & Co. KG
Klingenbergstraße 26
D-32758 Detmold
Germany

www.weidmueller.com

Accessories

Klippon® POK earthing plates

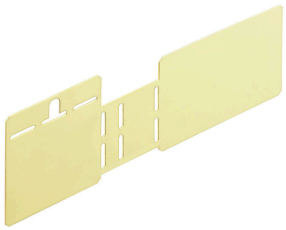

The Klippon® POK enclosure range is made from a high-quality glass fibre reinforced polyester and is ideal for applications and environments where corrosion resistance, impact resistance and a high IP protection class are a requirement.
Key features of the extensive product range:

- Available in 17 sizes
- Two standard finishes (colours): grey (similar to RAL 7001 for industrial use) and black (similar to RAL 9011 for harsh environments, Ex)
- Cover with stainless steel screws in cross-head / slotted design
- Moulded gasket made of silicone or chloroprene
- Fixing holes outside the sealed area to ensure high ingress protection of IP66
- Impact resistance up to 7 Joules
- Mounting directly in the enclosure or using an internal mounting plate
- Direct wall mounting possible using fixing holes or mounting feet
- Fastening thread to attach mounting rails and plates
- Up to E60 fire rating dependent on the configuration
- Weidmüller can manufacture and supply this enclosure to match customer specifications - fitted with all necessary terminals and cable glands.

General ordering data

Type	KLIPPON COPL 254012/16	Version
Order No.	1391040000	Klippon POK (polyester empty enclosure), Earthing plate,
GTIN (EAN)	4050118191141	Miscellaneous, Height: 85.5 mm, Width: 567 mm, Depth: 0.8 mm,
Qty.	5 ST	Basic material: Brass, polished, untreated

KLIPPON POK 254016

Weidmüller Interface GmbH & Co. KG
Klingenbergstraße 26
D-32758 Detmold
Germany

www.weidmueller.com

Accessories

Klippon® POK installation material

The Klippon® POK enclosure range is made from a high-quality glass fibre reinforced polyester and is ideal for applications and environments where corrosion resistance, impact resistance and a high IP protection class are a requirement.
Key features of the extensive product range:

- Available in 17 sizes
- Two standard finishes (colours): grey (similar to RAL 7001 for industrial use) and black (similar to RAL 9011 for harsh environments, Ex)
- Cover with stainless steel screws in cross-head / slotted design
- Moulded gasket made of silicone or chloroprene
- Fixing holes outside the sealed area to ensure high ingress protection of IP66
- Impact resistance up to 7 Joules
- Mounting directly in the enclosure or using an internal mounting plate
- Direct wall mounting possible using fixing holes or mounting feet
- Fastening thread to attach mounting rails and plates
- Up to E60 fire rating dependent on the configuration
- Weidmüller can manufacture and supply this enclosure to match customer specifications - fitted with all necessary terminals and cable glands.

General ordering data

Type	SD FIXING SET POK	Version
Order No.	1463490000	Klippon POK (polyester empty enclosure), Identification plate fixing
GTIN (EAN)	4050118299878	set, Height: 12 mm, Width: 12 mm, Depth: 16.4 mm, Basic material:
Qty.	1 ST	Stainless steel 1.4305 (303), untreated

KLIPPON POK 254016

Weidmüller Interface GmbH & Co. KG
Klingenbergstraße 26
D-32758 Detmold
Germany

www.weidmueller.com

Accessories

Klippon® POK standard mounting plates

The Klippon® POK enclosure range is made from a high-quality glass fibre reinforced polyester and is ideal for applications and environments where corrosion resistance, impact resistance and a high IP protection class are a requirement.
Key features of the extensive product range:
- Available in 17 sizes
- Two standard finishes (colours): grey (similar to RAL 7001 for industrial use) and black (similar to RAL 9011 for harsh environments, Ex)
- Cover with stainless steel screws in cross-head / slotted design
- Moulded gasket made of silicone or chloroprene
- Fixing holes outside the sealed area to ensure high ingress protection of IP66
- Impact resistance up to 7 Joules
- Mounting directly in the enclosure or using an internal mounting plate
- Direct wall mounting possible using fixing holes or mounting feet
- Fastening thread to attach mounting rails and plates
- Up to E60 fire rating dependent on the configuration
- Weidmüller can manufacture and supply this enclosure to match customer specifications - fitted with all necessary terminals and cable glands.

General ordering data

Type	POK MOPL 2540	Version
Order No.	9510650000	Klippon POK (polyester empty enclosure), Mounting plate, Height:
GTIN (EAN)	4032248415298	234 mm, Width: 384 mm, Depth: 1.5 mm, Basic material: Sheet
Qty.	1 ST	steel, galvanized, Miscellaneous, silver

KLIPPON POK 254016

Weidmüller Interface GmbH & Co. KG
Klingenbergstraße 26
D-32758 Detmold
Germany

www.weidmueller.com

Accessories

Klippon® POK mounting plates in combination with earthing plates

The Klippon® POK enclosure range is made from a high-quality glass fibre reinforced polyester and is ideal for applications and environments where corrosion resistance, impact resistance and a high IP protection class are a requirement.
Key features of the extensive product range:

- Available in 17 sizes
- Two standard finishes (colours): grey (similar to RAL 7001 for industrial use) and black (similar to RAL 9011 for harsh environments, Ex)
- Cover with stainless steel screws in cross-head / slotted design
- Moulded gasket made of silicone or chloroprene
- Fixing holes outside the sealed area to ensure high ingress protection of IP66
- Impact resistance up to 7 Joules
- Mounting directly in the enclosure or using an internal mounting plate
- Direct wall mounting possible using fixing holes or mounting feet
- Fastening thread to attach mounting rails and plates
- Up to E60 fire rating dependent on the configuration
- Weidmüller can manufacture and supply this enclosure to match customer specifications - fitted with all necessary terminals and cable glands.

General ordering data

Type	POK MOPL 2540 MINI	Version
Order No.	1534420000	Klippon POK (polyester empty enclosure), Mounting plate, Height:
GTIN (EAN)	4050118338164	204 mm, Width: 382 mm, Depth: 1.5 mm, Basic material: Sheet
Qty.	1 ST	steel, galvanized, galvanized, silver

KLIPPON POK 254016

Weidmüller Interface GmbH & Co. KG
Klingenbergstraße 26
D-32758 Detmold
Germany

www.weidmueller.com

Accessories

Depth 7.5 mm

The Klippon® POK enclosure range is made from a high-quality glass fibre reinforced polyester and is ideal for applications and environments where corrosion resistance, impact resistance and a high IP protection class are a requirement.
Key features of the extensive product range:
- Available in 17 sizes
- Two standard finishes (colours): grey (similar to RAL 7001 for industrial use) and black (similar to RAL 9011 for harsh environments, Ex)
- Cover with stainless steel screws in cross-head / slotted design
- Moulded gasket made of silicone or chloroprene
- Fixing holes outside the sealed area to ensure high ingress protection of IP66
- Impact resistance up to 7 Joules
- Mounting directly in the enclosure or using an internal mounting plate
- Direct wall mounting possible using fixing holes or mounting feet
- Fastening thread to attach mounting rails and plates
- Up to E60 fire rating dependent on the configuration
- Weidmüller can manufacture and supply this enclosure to match customer specifications - fitted with all necessary terminals and cable glands.

General ordering data

Type	TS35X7.5 ST POK 4040	Version
Order No.	8000003913	Rail, TS 35, TS 35 x 7.5, Width: 384 mm, without slot, Steel, galvanic
GTIN (EAN)	4050118652734	zinc plated and passivated
Qty.	20 ST	

Earthing stud

Earthing bolts to exchange as a complete component in two versions – brass and stainless steel.

General ordering data

Type	PEBZ M10 BR SET	Version
Order No.	1277220000	Klippon POK (polyester empty enclosure), Earthing stud,
GTIN (EAN)	4050118067019	Miscellaneous, Height: 21 mm, Width: 21 mm, Depth: 48.7 mm,
Qty.	1 ST	Basic material: Brass

KLIPPON POK 254016

Weidmüller Interface GmbH & Co. KG
Klingenbergstraße 26
D-32758 Detmold
Germany

www.weidmueller.com

Accessories

Klippon® POK earthing stud

The Klippon® POK enclosure range is made from a high-quality glass fibre reinforced polyester and is ideal for applications and environments where corrosion resistance, impact resistance and a high IP protection class are a requirement.
Key features of the extensive product range:
- Available in 17 sizes
- Two standard finishes (colours): grey (similar to RAL 7001 for industrial use) and black (similar to RAL 9011 for harsh environments, Ex)
- Cover with stainless steel screws in cross-head / slotted design
- Moulded gasket made of silicone or chloroprene
- Fixing holes outside the sealed area to ensure high ingress protection of IP66
- Impact resistance up to 7 Joules
- Mounting directly in the enclosure or using an internal mounting plate
- Direct wall mounting possible using fixing holes or mounting feet
- Fastening thread to attach mounting rails and plates
- Up to E60 fire rating dependent on the configuration
- Weidmüller can manufacture and supply this enclosure to match customer specifications - fitted with all necessary terminals and cable glands.

General ordering data

Type	PEBZ M10 S4 SET	Version
Order No.	1283440000	Klippon POK (polyester empty enclosure), Earthing stud,
GTIN (EAN)	4050118073362	Miscellaneous, Height: 21 mm, Width: 21 mm, Depth: 48.7 mm,
Qty.	1 ST	Basic material: Stainless steel 1.4404 (316L)
Type	PEBZ M6 BR SET	Version
Order No.	1277250000	Klippon POK (polyester empty enclosure), Earthing stud,
GTIN (EAN)	4050118067149	Miscellaneous, Height: 12.3 mm, Width: 12.3 mm, Depth: 42 mm,
Qty.	1 ST	Basic material: Brass

Earthing stud

Accessories

General ordering data

Type	PEBZ M6 S4 SET	Version
Order No.	1283430000	Klippon POK (polyester empty enclosure), Earthing stud,
GTIN (EAN)	4050118073607	Miscellaneous, Height: 12.3 mm, Width: 12.3 mm, Depth: 42 mm,
Qty.	1 ST	Basic material: Stainless steel 1.4404 (316L)

KLIPPON POK 254016

Weidmüller Interface GmbH & Co. KG
Klingenbergstraße 26
D-32758 Detmold
Germany

www.weidmueller.com

Accessories

Ventilation plugs - DAE

In addition to cable glands for a wide range of applications, the product portfolio is rounded off by plugs, pressure compensation elements, adaptors and the corresponding accessories such as locknuts, sealing rings, flat washers and earthing rings.

General ordering data

Type	DAE M12 PA LONG	Version
Order No.	1868570000	DAE (ventilation element), Compensating element, straight, M 12, 10
GTIN (EAN)	4032248440429	mm, IP66, IP68, IP69K, Polyamide 6
Qty.	10 ST	
Type	DAE M12 SS	Version
Order No.	1868550000	DAE (ventilation element), Compensating element, straight, M 12, 10
GTIN (EAN)	4032248440405	mm, IP66, IP68, IP69K, Stainless steel 1.4305 (303)
Qty.	10 ST	

Spacer

Stainless steel spacers in three lengths to increase the distance distance between the mounting rails or DIN rails and the rear wall of the enclosure.

General ordering data

Type	SP M6 15 MSZN	Version
Order No.	3896100000	Klippon EB (Essential Box), Spacer, Height: 11.2 mm, Width: 10 mm,
GTIN (EAN)	4008190857851	Depth: 15 mm, Basic material: Steel, silver
Qty.	2 ST	
Type	SP M6 20 MSZN	Version
Order No.	3896200000	Klippon EB (Essential Box), Spacer, Height: 11.2 mm, Width: 10 mm,
GTIN (EAN)	4008190850234	Depth: 20 mm, Basic material: Steel, silver
Qty.	2 ST	
Type	SP M6 30 MSZN	Version
Order No.	3896300000	Klippon EB (Essential Box), Spacer, Height: 11.2 mm, Width: 10 mm,
GTIN (EAN)	4008190850241	Depth: 30 mm, Basic material: Steel, silver
Qty.	2 ST	
Type	SP M6 15 S2	Version
Order No.	0935120000	Klippon TB (Terminal Box), Spacer, Height: 11.2 mm, Width: 10 mm,
GTIN (EAN)	4032248699056	Depth: 15 mm, Basic material: Stainless steel 1.4305 (303), silver
Qty.	4 ST	

KLIPPON POK 254016

Weidmüller Interface GmbH & Co. KG
Klingenbergstraße 26
D-32758 Detmold
Germany

www.weidmueller.com

Accessories

Type	SP M6 10 S2	Version
Order No.	0935110000	Klippon TB (Terminal Box), Spacer, Height: 11.2 mm, Width: 10 mm,
GTIN (EAN)	4032248699049	Depth: 10 mm, Basic material: Stainless steel 1.4305 (303), silver
Qty.	4 ST	
Type	SP M6 20 S2	Version
Order No.	0935130000	Klippon TB (Terminal Box), Spacer, Height: 11.2 mm, Width: 10 mm,
GTIN (EAN)	4032248699001	Depth: 20 mm, Basic material: Stainless steel 1.4305 (303), silver
Qty.	4 ST	
Type	SP M6 30 S2	Version
Order No.	0935140000	Klippon TB (Terminal Box), Spacer, Height: 11.2 mm, Width: 10 mm,
GTIN (EAN)	4032248699117	Depth: 30 mm, Basic material: Stainless steel 1.4305 (303), silver
Qty.	4 ST	

Installation material

Integrate, expand and customise - the perfect supplement to every application
The fully structured range of system accessories for the new Klippon® TB enclosure series allows you to easily adapt the enclosures to meet the specific requirements of every application.
Mounting hardware kits
Mounting hardware kits are available for quick and easy installation of type label holders, document holders and rain hoods.
The label fastening set – SD is required to install a plastic (Trafolyte) ID or type label. With the aid of this set can you mount the ID or type label directly on the enclosure cover. The label fastening set has been specially developed for this purpose. Only by using this fastening set can you ensure that there will be no leaks into the enclosure or damage to the label.
The universal fastening set – TPSD has been developed to enable secure and quick installation of type label holders, rain covers or document holders, for example. By using this fastening set, the risk of leaks can be minimised, if not avoided.

General ordering data

Type	FKSC M6X8 D9/SW3	Version
Order No.	0642600000	Klippon TB (Terminal Box), Mounting screw, Basic material: Steel
GTIN (EAN)	4008190058258	
Qty.	50 ST	