Data sheet

IE-AD-BHS-V14M-RJA

Weidmüller Interface GmbH & Co. KG
Klingenbergstraße 26
D-32758 Detmold
Germany

www.weidmueller.com

PushPull plug-in connector according to IEC 61076-3-117 ver.14 (PROFINET), metal, empty housing

General ordering data

Version	Adapter
Order No.	1302000000
Type	IE-AD-BHS-V14M-RJA
GTIN (EAN)	4050118099638
Qty.	1 items

IE-AD-BHS-V14M-RJA

Weidmüller Interface GmbH & Co. KG
Klingenbergstraße 26
D-32758 Detmold
Germany

www.weidmueller.com

Technical data

Approvals

Approvals	c UL us LISTED
ROHS	Conform
UL File Number Search	UL Website
Certificate no. (cULus)	E316369

Dimensions and weights

Depth	25.7 mm	Depth (inches)	1.0118 inch
Height	42 mm	Height (inches)	1.6535 inch
Width	24.2 mm	Width (inches)	0.9528 inch
Net weight	61.53 g		

Temperatures

Storage temperature		Operating temperature	-40 °C...70 °C
Installation temperature			

Environmental Product Compliance

RoHS Compliance Status	Compliant without exemption
REACH SVHC	No SVHC above 0.1 wt%

General data

Colour	Miscellaneous	Housing main material	Zinc diecast
Type of mounting	2 screws, M3 (not included)	Protection degree	IP67

General standards

Certificate no. (cULus)	E316369

Classifications

ETIM 8.0	EC001121	ETIM 9.0	EC001121
ETIM 10.0	EC001121	ECLASS 14.0	27-44-03-90
ECLASS 15.0	27-44-03-90		

IE-AD-BHS-V14M-RJA

Weidmüller Interface GmbH & Co. KG
Klingenbergstraße 26
D-32758 Detmold
Germany

www.weidmueller.com

Drawings

Installation cut-out

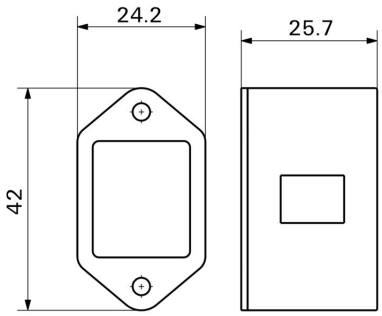
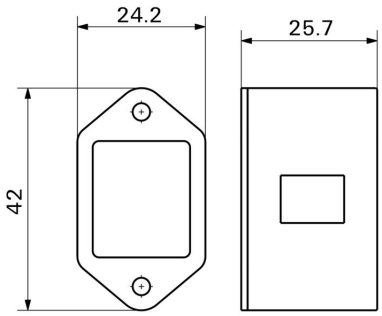
Dimensioned drawing