Data sheet

SAIL-7/8BW-5-10U

Weidmüller Interface GmbH & Co. KG
Klingenbergstraße 26
D-32758 Detmold
Germany

www.weidmueller.com









Sensor/actuator cables are used for wiring sensors and actuators and for transmitting data or power in various applications. The moulded cable offers connected and tested connection of the plug-in connector to the cable ex-works. The cables may be exposed to a wide range of conditions, such as humidity, dust, heat, cold, shock or vibration.
The 7/8" cables tend to be used for power supply applications.
Is there something you have not managed to find or you feel needs explanation? Talk to us!

General ordering data

Version	Sensor/actuator line, One end without connector, 7/8", Number of poles : 5 (4 + PE), 10 m, Socket, angled, Shielded: No, LED: No, Sheath material: PUR, Halogen: No
Order No.	1292201000
Type	SAIL-7/8BW-5-10U
GTIN (EAN)	4050118088243
Qty.	1 items

Data sheet

SAIL-7/8BW-5-10U

Weidmüller Interface GmbH & Co. KG
Klingenbergstraße 26
D-32758 Detmold
Germany

www.weidmueller.com

Technical data

Approvals

Approvals	
ROHS	Conform

Dimensions and weights

Net weight	1320 g

Environmental Product Compliance

RoHS Compliance Status	Compliant
REACH SVHC	Lead 7439-92-1
SCIP	ebf89fc8-a87f-4691-b87a-dfb9921774b4

Technical specifications for cable

Cable length	10 m	Sheathing colour	black
PE function	Yes	Suitable for cable carriers	Yes
Core cross-section	1.5 mm²	Shielded	No
Halogen	No	Insulation	TPM
Bending radius, min., moving	7.5 x cable diameter	Bending cycles	5 Mio
Sheath material	PUR	Cable length configurable	No
Outer cladding in accordance with UL AWM style	20234 (80 °C / 1000 V)	Irradiation crosslinked	No
Welding spark resistance	No	Colour coding	brown, white, blue, black, Green/yellow
Torsion resistance	0 °/m	Temperature range, stationary	-50...80 °C
Resistant to welding beads	No	Temperature range, moving	-20...80 °C
Number of poles	5 (4 + PE)	Outside diameter	8.7 mm ± 0.2 mm

General technical data

Coding	none	Connection thread	7/8"
Contact surface	Au (Gold)	LED	No
Version	Socket, angled	Housing main material	PUR
Insulation resistance	108 Ω	Contact material	CuZn
Nominal voltage	300 V	Nominal current	9 A
Protection degree	IP68, when screwed in	Plugging cycles	≥ 100
Pollution severity	3	jumpered	No
Rated impulse voltage	2500 V	Rated voltage (UL)	600 V
Threaded ring material	Diecast zinc	Temperature range of housing	-40 ... +85 ° C

Electrical properties

Volume resistance	≤3 mΩ	Insulation resistance	108 Ω
Nominal voltage	300 V	Rated current	9 A (4- and 5-pole), 12 A (3-pole)

Plug, left

Plug left	IP68, female contact, angled 90°, Plastic, unshielded

SAIL-7/8BW-5-10U

Weidmüller Interface GmbH & Co. KG
Klingenbergstraße 26
D-32758 Detmold
Germany

www.weidmueller.com

Technical data

Plug, right

Plug right	free conductor end

Classifications

ETIM 8.0	EC001855	ETIM 9.0	EC001855
ETIM 10.0	EC001855	ECLASS 14.0	27-06-03-11
ECLASS 15.0	27-06-03-11		

SAIL-7/8BW-5-10U

Weidmüller Interface GmbH & Co. KG
Klingenbergstraße 26
D-32758 Detmold
Germany

www.weidmueller.com

Drawings

Dimensioned drawing

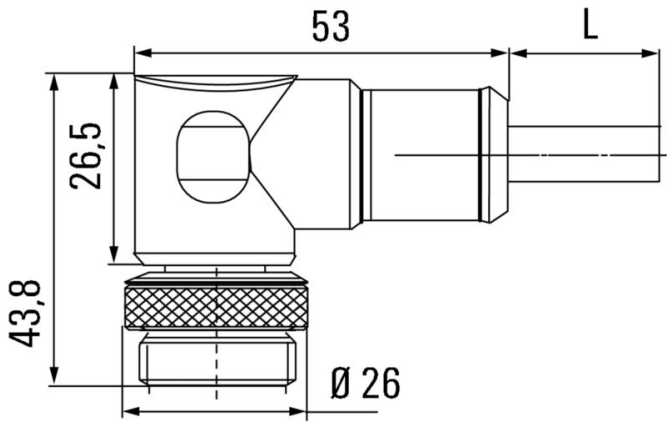

Angled socket

Pole scheme

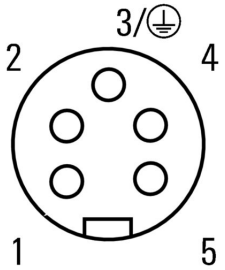

Socket

Wiring diagram

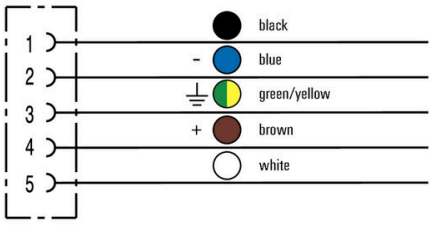

The ideal tool: Screwty ® with torque function

Light, securely screwed-in round plug-in connectors. Screwty set DM / VPE: 1 / Order No.: 1920000000 Adapters: M12, M12 F, M8, M8 F

Weidmüller Interface GmbH & Co. KG
Klingenbergstraße 26
D-32758 Detmold
Germany

www.weidmueller.com

Drawings