Data sheet

S2C-SMT 3.50/20/180LF 1.5SN BK BX

Weidmüller Interface GmbH & Co. KG
Klingenbergstraße 26
D-32758 Detmold
Germany

www.weidmueller.com

Product image

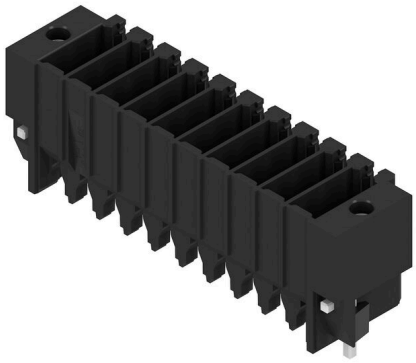

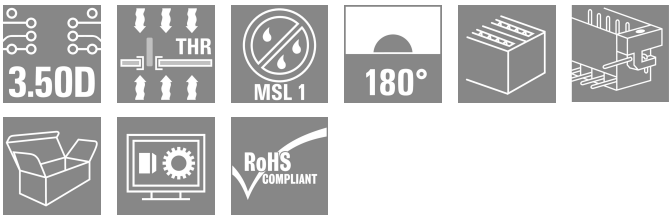

High-temperature-resistant pin header.

- touch-safe
- can be plugged into B2CF 3.50 PUSH IN female plug
- Plug-in direction is perpendicular or parallel to the circuit board (180° / 90°)
- Housing variants: closed (G) and with solder flange (LF)
- Box packaging (BX) or, anti-static, tape-on-reel (RL)
- Suitable for reflow and wave soldering applications
- Pin length of either 1.5 mm or 3.5 mm

General ordering data

Version	PCB plug-in connector, male header, Solder flange, THT/THR solder connection, 3.50 mm, Number of poles: 20, 180°, Solder pin length (l): 1.5 mm, tinned, black, Box
Order No.	1290690000
Type	S2C-SMT 3.50/20/180LF 1.5SN BK BX
GTIN (EAN)	4050118083651
Qty.	42 items
Product data	IEC: 200 V / 13.4 A UL: 150 V / 9.5 A
Packaging	Box

S2C-SMT 3.50/20/180LF 1.5SN BK BX

Weidmüller Interface GmbH & Co. KG
Klingenbergstraße 26
D-32758 Detmold
Germany

www.weidmueller.com

Technical data

Approvals

Approvals	
ROHS	Conform
UL File Number Search	UL Website
Certificate No. (cURus)	E60693

Dimensions and weights

Depth	10.8 mm	Depth (inches)	0.4252 inch
Height	15.7 mm	Height (inches)	0.6181 inch
Height of lowest version	14.2 mm	Width	42 mm
Width (inches)	1.6535 inch	Net weight	6.19 g

Environmental Product Compliance

RoHS Compliance Status	Compliant without exemption
REACH SVHC	No SVHC above 0.1 wt%

System specifications

Product family	OMNIMATE Signal - series B2C/S2C 3.50 - 2-row	Type of connection	Board connection
Mounting onto the PCB	THT/THR solder connection	Pitch in mm (P)	3.50 mm
Pitch in inches (P)	0.138 "	Outgoing elbow	180°
Number of poles	20	Number of solder pins per pole	1
Solder pin length (l)	1.5 mm	Solder pin length tolerance	0 / -0.3 mm
Solder pin dimensions	d = 1.0 mm, Octagonal	Solder pin dimensions = d tolerance	+0,01 / -0,03 mm
Solder eyelet hole diameter (D)	1.3 mm	Solder eyelet hole diameter tolerance (D)	+ 0,1 mm
Outside diameter of solder pad	2.1 mm	Template aperture diameter	1.9 mm
L1 in mm	31.50 mm	L1 in inches	1.240 "
Number of rows	1	Pin series quantity	2
Touch-safe protection acc. to DIN VDE 57 106	finger-safe unplugged/ back-of-hand-safe plugged	Touch-safe protection acc. to DIN VDE 0470	IP20 plugged/ IP10 unplugged
Can be coded	Yes	Plugging force/pole, max.	3.5 N
Pulling force/pole, max.	3.5 N		

Material data

Insulating material	LCP GF	Colour	black
Colour chart (similar)	RAL 9011	Insulating material group	IIIb
Comparative Tracking Index (CTI)	≥ 175	Moisture Level (MSL)	1
UL 94 flammability rating	V-0	Contact material	Copper alloy
Contact surface	tinned	Layer structure of solder connection	1...3 µm Ni / 2...4 µm Sn matt
Layer structure of plug contact	1...3 µm Ni / 2...4 µm Sn matt	Storage temperature, min.	-40 °C
Storage temperature, max.	70 °C	Operating temperature, min.	-50 °C
Operating temperature, max.	120 °C	Temperature range, installation, min.	-40 °C
Temperature range, installation, max.	120 °C		

S2C-SMT 3.50/20/180LF 1.5SN BK BX

Weidmüller Interface GmbH & Co. KG
Klingenbergstraße 26
D-32758 Detmold
Germany

www.weidmueller.com

Technical data

Rated data acc. to IEC

tested acc. to standard	IEC 60664-1, IEC 61984	Rated current, min. number of poles (Tu=20°C)	13.4 A
Rated current, min. number of poles (Tu=40°C)	12 A	Rated voltage for surge voltage class / pollution degree II/2	200 V
Rated voltage for surge voltage class / pollution degree III/2	160 V	Rated voltage for surge voltage class / pollution degree III/3	80 V
Rated impulse voltage for surge voltage class/ pollution degree II/2	2.5 kV	Rated impulse voltage for surge voltage class/ pollution degree III/2	2.5 kV
Rated impulse voltage for surge voltage class/ contamination degree III/3	2.5 kV	Short-time withstand current resistance	3 x 1s with 80 A

Rated data acc. to CSA

Institute (CSA)	CSA	Certificate No. (CSA)	200039-1121690
Rated voltage (Use group B / CSA)	150 V	Rated voltage (Use group C / CSA)	50 V
Rated voltage (Use group D / CSA)	150 V	Rated current (Use group B / CSA)	9.5 A
Rated current (Use group C / CSA)	9.5 A	Rated current (Use group D / CSA)	9.5 A
Reference to approval values	Specifications are maximum values, details - see approval certificate.		

Rated data acc. to UL 1059

Institute (cURus)	CURUS	Certificate No. (cURus)	E60693
Rated voltage (Use group B / UL 1059)	150 V	Rated voltage (Use group C / UL 1059)	50 V
Rated current (Use group B / UL 1059)	9.5 A	Rated current (Use group C / UL 1059)	9.5 A
Reference to approval values	Specifications are maximum values, details - see approval certificate.		

Packing

Packaging	Box	VPE length	338.00 mm
VPE width	130.00 mm	VPE height	14.00 mm

Important note

IPC conformity	Conformity: The products are developed, manufactured and delivered according international recognized standards and norms and comply with the assured properties in the data sheet resp. fulfill decorative properties in accordance with IPC-A-610 "Class 2". Further claims on the products can be evaluated on request.
Notes	• Gold-plated contact surfaces on request • Rated current related to rated cross-section & min. No. of poles. • Spacing between rows: see hole layout • P on drawing = pitch • Rated data refer only to the component itself. Clearance and creepage distances to other components are to be designed in accordance with the relevant application standards. • In accordance with IEC 61984, OMNIMATE-connectors are connectors without breaking capacity (COC). During designated use, connectors are not allowed to be engaged or disengaged when live or under load • Long term storage of the product with average temperature of 50 °C and maximum humidity 70%, 36 months

Classifications

ETIM 8.0	EC002637	ETIM 9.0	EC002637
ETIM 10.0	EC002637	ECLASS 14.0	27-46-02-01
ECLASS 15.0	27-46-02-01		

S2C-SMT 3.50/20/180LF 1.5SN BK BX

Weidmüller Interface GmbH & Co. KG
Klingenbergstraße 26
D-32758 Detmold
Germany

www.weidmueller.com

Drawings

Product image

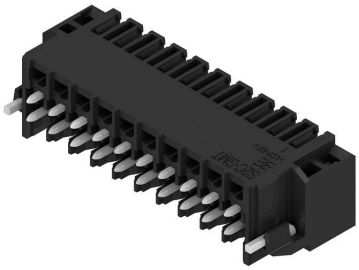

Dimensional drawing

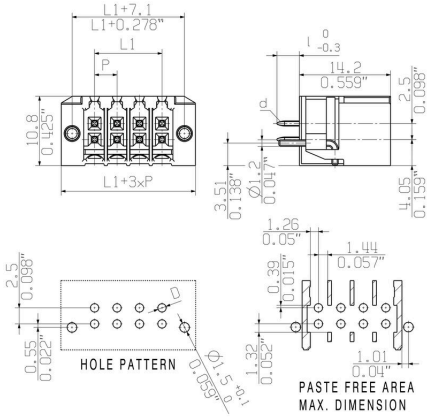

S2C-SMT 3.50/20/180LF 1.5SN BK BX

Weidmüller Interface GmbH & Co. KG
Klingenbergstraße 26
D-32758 Detmold
Germany

www.weidmueller.com

Accessories

Coding elements

Only connects what is supposed to be connected: the right connection at the right place.
Coding elements and locking devices clearly assign connecting elements during the manufacturing process and operation
The coding elements and locking devices are inserted prior to assembly or during the cable assembly phase.
The Weidmüller alternative: configure online using the variant configurator to precode prior to delivery.
Incorrect assembly on the circuit board and incorrect plugging of connecting elements is no longer possible.
The advantage: no troubleshooting during manufacture and no operational errors by the user.

General ordering data

Type	B2L/S2L 3.50 KO BK BX	Version
Order No.	1849740000	PCB plug-in connector, Accessories, Coding element, black, Number
GTIN (EAN)	4032248378203	of poles: 1
Qty.	100 ST	
Type	B2L/S2L 3.50 KO OR BX	Version
Order No.	1849730000	PCB plug-in connector, Accessories, Coding element, orange, Number
GTIN (EAN)	4032248378197	of poles: 1
Qty.	100 ST	