Data sheet

SAIE-M12S-PB-1.0U HW

Weidmüller Interface GmbH & Co. KG
Klingenbergstraße 26
D-32758 Detmold
Germany

www.weidmueller.com



Various build-in connectors are required for the connections on the device side of the sensor/actuator cabling. These are available in the versions M12, M8 and M5.

General ordering data

Version	Built-in plugs, M12, pin, straight, PG 9, Number of poles: 2, 1 m
Order No.	1279490100
Type	SAIE-M12S-PB-1.0U HW
GTIN (EAN)	4050118076349
Qty.	1 items
Delivery status	Discontinued
Last order date	2026-02-27T00:00:00+01:00

SAIE-M12S-PB-1.0U HW

Weidmüller Interface GmbH & Co. KG
Klingenbergstraße 26
D-32758 Detmold
Germany

www.weidmueller.com

Technical data

Approvals

ROHS	Conform

Dimensions and weights

Net weight	82 g

Environmental Product Compliance

RoHS Compliance Status	Compliant with exemption
RoHS Exemption (if applicable/known)	6c
REACH SVHC	Lead 7439-92-1
SCIP	e8d8af70-4c85-4483-bc8c-9bc5b598e2a9

Technical specifications for cable

Cable length	1 m	Sheathing colour	violet (similar to RAL 4001)
PE function	No	Core cross-section	0.25 mm²
Strand / cable length	1 m	Number of poles	2

Technical data customisable plug-in connectors

Number of poles	2	Coding	B-coded
Contact surface	Gold-plated	Type of connection	Pin
Housing main material	Zinc diecast, nickel-plated	Conductor cross-section, max.	0.25 mm²
Nominal voltage	250 V	Nominal current	4 A
Protection degree	IP68	Plugging cycles	≥ 500
Pollution severity	3	Cable gland	PG 9
Temperature range of housing	-20 … +60 °C		

Classifications

ETIM 8.0	EC003570	ETIM 9.0	EC003570
ETIM 10.0	EC003570	ECLASS 14.0	27-44-01-03
ECLASS 15.0	27-44-01-03		

SAIE-M12S-PB-1.0U HW

Weidmüller Interface GmbH & Co. KG
Klingenbergstraße 26
D-32758 Detmold
Germany

www.weidmueller.com

Drawings

Dimensioned drawing

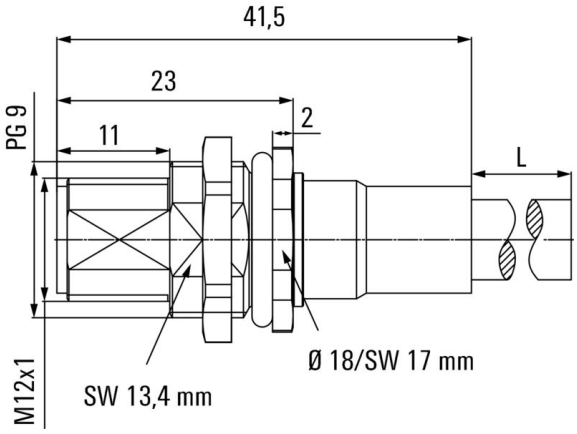

Detailed drawing

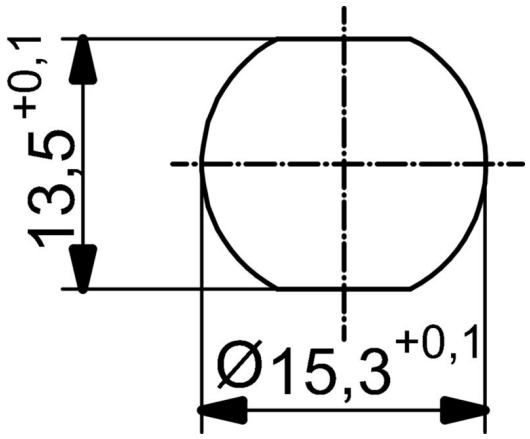

Wiring diagram

