Data sheet

SAIL-VSB-M8G-3-5.0U

Weidmüller Interface GmbH & Co. KG
Klingenbergstraße 26
D-32758 Detmold
Germany

www.weidmueller.com



Weidmüller can supply valve plugs as connecting lines with M8/M12 plugs and one end without connector. The status of the valve plug is shown by an LED. The valve plugs have a protective circuit. The Weidmüller range includes valve plugs of type A, B and C to DIN and industry standards. Protection class IP 67 is fulfilled when screwed in. The outlet direction is also a decisive factor, therefore Weidmüller offers different versions.

General ordering data

Version	Valve cable (assembled), Straight plug - valve plug, Industrial design B (11 mm), M8 = none, Cable length: 5 m, PUR, black
Order No.	1271590500
Type	SAIL-VSB-M8G-3-5.0U
GTIN (EAN)	4050118167764
Qty.	1 items
Delivery status	This article will no longer be available in the future.
Last order date	2027-02-28T00:00:00+01:00

Data sheet

SAIL-VSB-M8G-3-5.0U

Weidmüller Interface GmbH & Co. KG
Klingenbergstraße 26
D-32758 Detmold
Germany

www.weidmueller.com

Technical data

Approvals

Approvals	
ROHS	Conform

Dimensions and weights

Net weight	168 g

Environmental Product Compliance

RoHS Compliance Status	Compliant with exemption
RoHS Exemption (if applicable/known)	6c
REACH SVHC	Lead 7439-92-1
SCIP	6ef4f442-4200-442c-9896-7fd648ce3c59

Technical specifications for cable

Cable length	5 m	Sheathing colour	black
Suitable for cable carriers	Yes	Core cross-section	0.5 mm²
Shielded	No	Halogen	No
Insulation	PP	Acceleration	5 m/s²
Bending radius, min., moving	10 x cable diameter	Bending radius, min., stationary	5 x cable diameter
Bending cycles	2 Mio	Speed	200 m/s
Sheath material	PUR	Welding spark resistance	No
Colour coding	brown, blue, Green/yellow	Torsion resistance	0 °/m
Temperature range, stationary	-50...80 °C	Resistant to welding beads	No
Temperature range, moving	-25...80 °C	Number of poles	3
Outside diameter	4.6 mm ± 0.2 mm		

General technical data

Coding	Industrial design B (11 mm), M8 = none	Contact surface	tinned
LED	Yes	Version	Straight plug - valve plug
Nominal voltage	24 V	Nominal current	4 A
Protection degree	IP67, when screwed in	All valve plugs are fitted with protective circuits	Suppressor diode
Temperature range of housing	-25...+80 °C		

Plug, left

Plug left	connector, Valve plug, Industrial design B (11 mm), Number of poles: 3, IP67, female contact, angled 0°, with protective circuit: Suppressor diode, LED yellow, unshielded

Plug, right

Plug right	connector, M8, Number of poles: 3, IP67,

SAIL-VSB-M8G-3-5.0U

Weidmüller Interface GmbH & Co. KG
Klingenbergstraße 26
D-32758 Detmold
Germany

www.weidmueller.com

Technical data

	male contact, straight, unshielded

Classifications

ETIM 8.0	EC001855	ETIM 9.0	EC001855
ETIM 10.0	EC001855	ECLASS 14.0	27-06-03-12
ECLASS 15.0	27-06-03-12		

SAIL-VSB-M8G-3-5.0U

Weidmüller Interface GmbH & Co. KG
Klingenbergstraße 26
D-32758 Detmold
Germany

www.weidmueller.com

Drawings

Dimensioned drawing

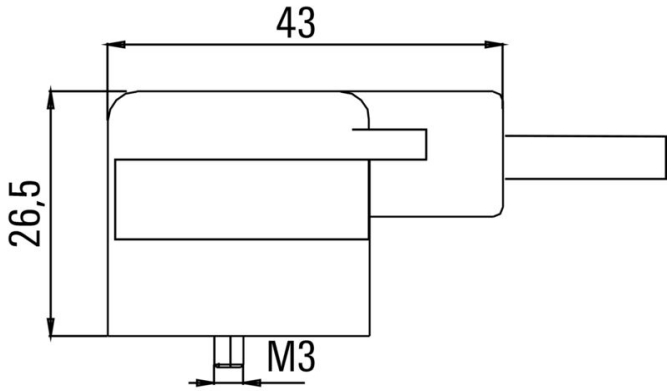

Dimensioned drawing

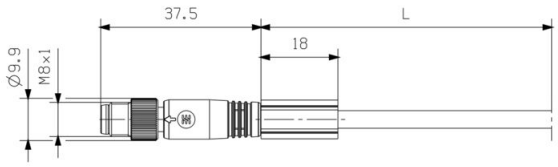

Pole scheme

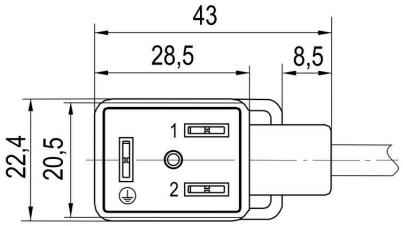

Pole scheme

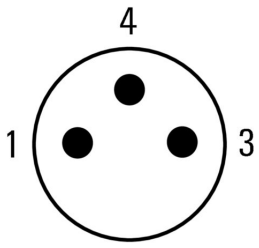

Wiring diagram

