Data sheet

IE-C5DS4UG0010MBSA70-E

Weidmüller Interface GmbH & Co. KG
Klingenbergstraße 26
D-32758 Detmold
Germany

www.weidmueller.com

Assembled IE cables, PROFINET, Cat. 5, PUR, green

General ordering data

Version	System cable, M12 D-code – flange, RJ45 IP 20, Cat.5 (ISO/IEC 11801) / Cat.5e (TIA T568-B), PUR, 1 m
Order No.	1234750010
Type	IE-C5DS4UG0010MBSA70-E
GTIN (EAN)	4050118023909
Qty.	1 items

IE-C5DS4UG0010MBSA70-E

Weidmüller Interface GmbH & Co. KG
Klingenbergstraße 26
D-32758 Detmold
Germany

www.weidmueller.com

Technical data

Approvals

ROHS	Conform

Dimensions and weights

Length	1 m	Length (inches)	39.3701 inch
Net weight	79.2 g		

Temperatures

Storage temperature	-50 °C...70 °C	Operating temperature	-40 °C...70 °C
Installation temperature	-20 °C...60 °C		

Environmental Product Compliance

RoHS Compliance Status	Compliant with exemption
RoHS Exemption (if applicable/known)	6c
REACH SVHC	Lead 7439-92-1
SCIP	67cf1078-beca-4687-860b-dc475a6ec24a

Cable structure

Sheathing colour	green (RAL 6018)	Cross-section	4*AWG 22/7 - 0.32 mm²
Shielding	360° shield contact	Insulation cross-section	1.5 mm
Sheath diameter, max.	6.7 mm	Material sheath	PUR

Electrical properties of cable

Category	Cat.5 (ISO/IEC 11801) / Cat.5e (TIA T568-B)

Mechanical and material properties of cable

Halogen	halogen-free, according to IEC 60754-2	Min. bending radius, repetitive	15 x cable diameter
Min. bending radius, once only	5 x cable diameter	Resistance to spread of flame	Yes

Plug, left

Plug left	M12, D-coded, IP67, female contact, straight, flange, Plastic, shielded

Plug, right

Plug right	RJ45, IP20, male contact, straight, plug, Plastic, shielded

Classifications

ETIM 8.0	EC002599	ETIM 9.0	EC002599
ETIM 10.0	EC002599	ECLASS 14.0	27-06-03-08
ECLASS 15.0	27-06-03-08		

IE-C5DS4UG0010MBSA70-E

Weidmüller Interface GmbH & Co. KG
Klingenbergstraße 26
D-32758 Detmold
Germany

www.weidmueller.com

Drawings

Wiring diagram

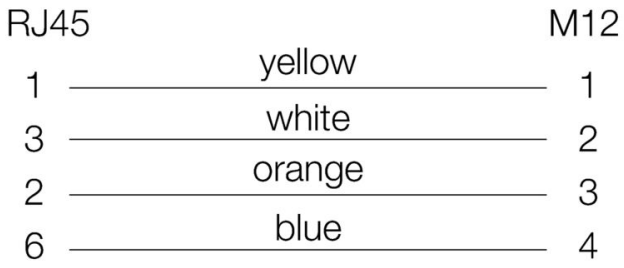

Dimensioned drawing

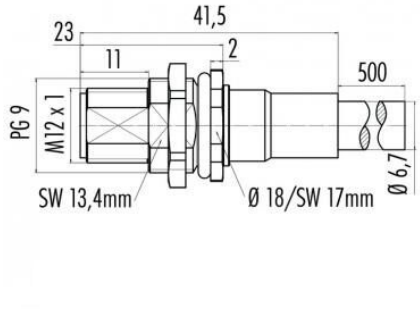

Hexagon nut enclosed loosely

Dimensioned drawing

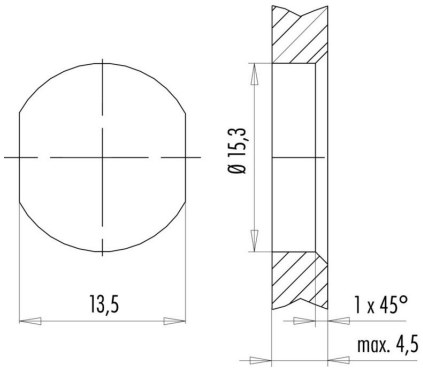

with through hole