Data sheet

KTB MH 352615 S4N4

Weidmüller Interface GmbH & Co. KG
Klingenbergstraße 26
D-32758 Detmold
Germany

www.weidmueller.com

Similar to illustration

Abbildung ähnlich

The Klippon® TB enclosure range provides excellent performance characteristics, even under the most difficult environmental conditions. In addition, it complies with the stricter requirements of potentially explosive atmospheres found specifically in the process or power generation industries. The Klippon® TB MH enclosure range offers further improvements to a product line that is already successfully leading the market.
The Klippon® TB MH enclosure range has the following advantages:

- Available in 15 sizes and 3 standard depths
- Equipped with up to 4 gland plates
- The gasket is protected against compression
- Completely removable padlock tab
- Cover lock outside the sealed zone
- Improved temperature performance
- IP66/IP67 protection
- Completely removable lid – without a tool
- Earthing stud in the cover and base of the enclosure
- Welded mounting feet
- International approvals

General ordering data

Version	Klippon TB MH (Terminal Box - Multi Hinge), Empty enclosure, stainless steel enclosure, Height: 350 mm, Width: 260 mm, Depth: 150 mm, Gland plates: Bottom, top, left, right, Basic material: Stainless steel 1.4404 (316L), untreated, silver
Order No.	1194840002
Type	KTB MH 352615 S4N4
GTIN (EAN)	4050118107326
Qty.	1 items

KTB MH 352615 S4N4

Weidmüller Interface GmbH & Co. KG
Klingenbergstraße 26
D-32758 Detmold
Germany

www.weidmueller.com

Technical data

Approvals

Approvals	
ROHS	Conform
UL File Number Search	UL Website
Certificate no. (cULus)	E243298

Dimensions and weights

Depth	150 mm	Depth (inches)	5.9055 inch
Height	350 mm	Height (inches)	13.7795 inch
Width	260 mm	Width (inches)	10.2362 inch
Mounting dimension - height	250 mm	Mounting dimension - width	316 mm
Net weight	12776.99 g		

Temperatures

Operating temperature	-60 °C...135 °C	Note: room temperature (service)	Limited to IP66 protection when used in temperatures greater than 105 °C.

Environmental Product Compliance

RoHS Compliance Status	Compliant with exemption
RoHS Exemption (if applicable/known)	6c
REACH SVHC	Lead 7439-92-1
SCIP	8d5fcdfe-c58e-44e1-a6b4-74d2bbccc9dd

Cable glands, left

M63	0	M75	0
M12	23	M50	3
M16	13	M32	4
M25	5	M20	11
M40	3		

Cable glands, right

M25	5	M63	0
M75	0	M16	13
M40	3	M50	3
M32	4	M20	11
M12	23		

KTB MH 352615 S4N4

Weidmüller Interface GmbH & Co. KG
Klingenbergstraße 26
D-32758 Detmold
Germany

www.weidmueller.com

Technical data

Cable glands, top/bottom

M20	9	M12	20
M63	0	M40	3
M32	3	M25	4
M50	2	M75	0
M16	11		

Certificate numbers enclosure

Certificate No. UL Haz.Loc.	E223792	Declaration of Conformatiy No. (DoC LVD)	DE PS261X 160412 001ISS03
Certificate No. UL Ord.Loc.	E243298	Certificate No. UL 508A	E223801
Attestation of Conformatiy No. (AoC)	DE PS261X 160309 001ISS06	Certificate No. UL Terminal Box	E223792
Certificate No. Electronic Box (NEPSI)	2020322303003289	Certificate no. empty enclosure (ECAS)	21-09-25241/ E21-09-053807
Certificate no. empty enclosure (INMETRO)	LMP 21.0016U	Certificate No. (DNV)	TAE000013S
Certificate No. (CCOE)	P461058_1	Certificate no. Terminal Box (INMETRO)	LMP 21.0017
Certificate no. (INMETRO)	IEX13.0006U	Certificate No. (IECEX)	IECEXPTB11.0071
Certificate No. (ATEX)	PTB11ATEX2019	Approval conditions	ATEX, CCoE, DNV, IECEX, INMETRO, KC, NEPSI, CCC, UL AEx Class Div., UL AEx Class Zone, cULus
Certificate no. (cULus)	E243298		

General information

Material thickness of cover	1.5 mm	Material thickness of flange	3 mm
Material thickness of enclosure	1.5 mm	Operating temperature, max.	135 °C
Operating temperature, min.	-60 °C	Lid attachment	4 hinges and M6 hex-head slotted screws SW10
Standards	DIN EN 62208 - Empty enclosure standard, DIN EN 61373 Class 1B**, DIN EN 15085-2, EN 60079-0, EN 60079-7, EN 60079-31, IEC 60079-0, IEC 60079-7, IEC 60079-31	Surface finish	untreated
Impact resistance	7 J ATEX version, 10 J version standard	AF size	10 mm
Protection degree	IP66, IP67	Basic material	Stainless steel 1.4404 (316L)
Seal material	Silicone	Torque for lid screws	2.5 Nm
Integral fixing	4, 6 or 9 stud bolts M6 inner (female) thread	Enclosure attachment	4 welded-on mounting feet with 11 mm holes (2 slotted feet and 2 cross-shaped feet)
Note: protection class	If used in temperature ranges above 105 °C, IP protection is limited to IP 66.	Flange plate mounting	M6 hexagonal head screws 10 SW
Protection class (UL)	Type 3, Type 4X, Type 12	Number of lid screws	4
Gland plates	Bottom, top, left, right	Dimension of box	450x510x240
Access opening: width	201 mm	Opening angle lid	130.00 °
Overall dimensions	372 x 341 x 165	Flange plate	Yes
Max. payload	36 kg	Lid	Yes

KTB MH 352615 S4N4

Weidmüller Interface GmbH & Co. KG
Klingenbergstraße 26
D-32758 Detmold
Germany

www.weidmueller.com

Technical data

Access opening: height	297 mm	Position PE bolts	Enclosure side C
Areas of use	Explosive risk zone, Process industry, Oil and gas industry, Chemical industry, Offshore, Onshore		

Housing earth

Earth, enclosure, internal	Welded-on M6 stainless-steel earth stud in enclosure body and lid.

horizontal assembly

WDU 10 / ZDU 10	2x15	WDU 16 / ZDU 16	1x12
WDU 2,5 / ZDU 2,5 / IDU 2,5	2x31	WDU 35 / ZDU 35	1x9
WDU 4 / ZDU 4	2x26	WDU 6 / ZDU 6	2x19

vertical assembly

WDU 10 / ZDU 10	1x25	WDU 16 / ZDU 16	1x20
WDU 2,5 / ZDU 2,5 / IDU 2,5	2x49	WDU 35 / ZDU 35	1x15
WDU 4 / ZDU 4	1x41	WDU 6 / ZDU 6	1x31

Important note

Product information	Minimum order quantity (5 pieces)

Classifications

ETIM 8.0	EC002503	ETIM 9.0	EC002503
ETIM 10.0	EC002503	ECLASS 14.0	27-18-05-02
ECLASS 15.0	27-18-05-02		

KTB MH 352615 S4N4

Weidmüller Interface GmbH & Co. KG
Klingenbergstraße 26
D-32758 Detmold
Germany

www.weidmueller.com

Drawings

Dimensioned drawing

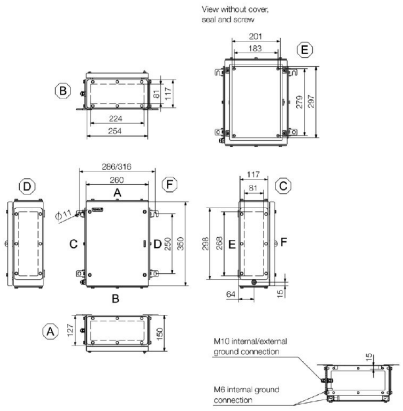

Weidmüller Interface GmbH & Co. KG
Klingenbergstraße 26
D-32758 Detmold
Germany

www.weidmueller.com

Accessories

350 x 260mm

Integrate, expand and customise: The ideal expansion for every application
The consistent structure of accessories for the new Klippon® TB enclosure range means that you can easily adapt the enclosure to the specific requirements of each application.
Mounting plates
Mounting plates, with and without hole patterns, for longitudinal and transverse mounting of DIN mounting rails or components directly onto the mounting plate.

General ordering data

Type	KTB MOPL 3526 MSZN	Version
Order No.	1193970000	Klippon TB (Terminal Box), Mounting plate, Height: 295 mm, Width:
GTIN (EAN)	4050118028577	199 mm, Depth: 1.5 mm, Basic material: Sheet steel, galvanized,
Qty.	1 ST	silver
Type	KTB MOPL 3526 S2N	Version
Order No.	1193840000	Klippon TB (Terminal Box), Mounting plate, Height: 295 mm, Width:
GTIN (EAN)	4050118028447	199 mm, Depth: 1.5 mm, Basic material: Stainless steel 1.4301
Qty.	1 ST	(304), untreated, silver
Type	KTB MOPL 3526 MSZN H	Version
Order No.	2022310000	Klippon TB (Terminal Box), Mounting plate, prepunched, Height: 295
GTIN (EAN)	4050118403633	mm, Width: 199 mm, Depth: 1.5 mm, Basic material: Sheet steel,
Qty.	1 ST	galvanized, silver
Type	KTB MOPL 3526 S2N H	Version
Order No.	1257680000	Klippon TB (Terminal Box), Mounting plate, prepunched, Height: 295
GTIN (EAN)	4050118049282	mm, Width: 199 mm, Depth: 1.5 mm, Basic material: Stainless steel
Qty.	1 ST	1.4301 (304), untreated, silver

Gland plates without earthing studs

Integrate, expand and customise: The ideal expansion for every application
The consistent structure of accessories for the new Klippon® TB enclosure range means that you can easily adapt the enclosure to the specific requirements of each application.
Flange plates
Flange plates in two thicknesses, for easy replacement of pre-assembl

General ordering data

Type	KTB GP XX2615 AB S4 3MM	Version
Order No.	1280990000	Klippon TB (Terminal Box), flange plate, straight, Height: 254 mm,
GTIN (EAN)	4050118071900	Width: 117 mm, Depth: 3 mm, Gland plates: top, Bottom, Basic
Qty.	1 ST	material: Stainless steel 1.4404, Stainless steel 1.4404 (316L),
		electropolished, silver
Type	KTB GP 35XX15 CD S4	Version
Order No.	1281000000	Klippon TB (Terminal Box), flange plate, straight, Height: 298 mm,
GTIN (EAN)	4050118071634	Width: 117 mm, Depth: 3 mm, Gland plates: left, right, Basic material:
Qty.	1 ST	Stainless steel 1.4404, electropolished, silver

KTB MH 352615 S4N4

Weidmüller Interface GmbH & Co. KG
Klingenbergstraße 26
D-32758 Detmold
Germany

www.weidmueller.com

Accessories

Gland plates made out of stainless steel - 6 mm

Integrate, expand and customise: The ideal expansion for every application
The consistent structure of accessories for the new Klippon® TB enclosure range means that you can easily adapt the enclosure to the specific requirements of each application.
Flange plates
Flange plates in two thicknesses, for easy replacement of pre-assembl

General ordering data

Type	KTB GP XX2615 AB S4 6MM	Version
Order No.	1256380000	Klippon TB (Terminal Box), flange plate, straight, Height: 254 mm,
GTIN (EAN)	4050118093797	Width: 117 mm, Depth: 6 mm, Gland plates: top, Bottom, Basic
Qty.	1 ST	material: Stainless steel 1.4404, electropolished, silver
Type	KTB GP 352615 CD S4 6MM	Version
Order No.	1256390000	Klippon TB (Terminal Box), flange plate, straight, Height: 298 mm,
GTIN (EAN)	4050118093803	Width: 117 mm, Depth: 6 mm, Gland plates: left, right, Basic material:
Qty.	1 ST	Stainless steel 1.4404, electropolished, silver

Gland plates with earthing studs

Integrate, expand and customise: The ideal expansion for every application
The consistent structure of accessories for the new Klippon® TB enclosure range means that you can easily adapt the enclosure to the specific requirements of each application.
Flange plates
Flange plates in two thicknesses, for easy replacement of pre-assembl

General ordering data

Type	KTB GP XX2615 AB S4 PE	Version
Order No.	2023160000	Klippon TB (Terminal Box), flange plate, straight, Height: 254 mm,
GTIN (EAN)	4050118403794	Width: 117 mm, Depth: 3 mm, Gland plates: top, Bottom, Basic
Qty.	1 ST	material: Stainless steel 1.4404, electropolished, silver
Type	KTB GP 352615 CD S4 PE	Version
Order No.	2023210000	Klippon TB (Terminal Box), flange plate, straight, Height: 298 mm,
GTIN (EAN)	4050118403534	Width: 117 mm, Depth: 3 mm, Gland plates: left, right, Basic material:
Qty.	1 ST	Stainless steel 1.4404, electropolished, silver

KTB MH 352615 S4N4

Weidmüller Interface GmbH & Co. KG
Klingenbergstraße 26
D-32758 Detmold
Germany

www.weidmueller.com

Accessories

Stainless steel 1.4301

Integrate, expand and customise: The ideal expansion for every application
The consistent structure of accessories for the new Klippon® TB enclosure range means that you can easily adapt the enclosure to the specific requirements of each application.
Rain Covers
The rain cover provides an ideal, additional level of protection for the enclosure if it is installed in unusual climatic zones with, for instance, very heavy rainfall or extreme levels of direct sunlight.

General ordering data

Type	KTB RNHD 352615 R	Version
Order No.	1281410000	Klippon TB (Terminal Box), Rain hood, Height: 53.4 mm, Width: 265
GTIN (EAN)	4050118071955	mm, Depth: 160.5 mm, Basic material: Stainless steel 1.4301, Mirror
Qty.	1 ST	polished, silver

Type label holder

Integrate, expand and customise: The ideal expansion for every application
The consistent structure of accessories for the new Klippon® TB enclosure range means that you can easily adapt the enclosure to the specific requirements of each application.
Nameplate holders
There are a variety of designed label holders available for prominent display as required and for additional nameplates as needed.

General ordering data

Type	TPSDHA KTB 100X25 S2 2R	Version
Order No.	1257640000	Klippon TB (Terminal Box), Ratings plate holder, Riveted, Height: 25
GTIN (EAN)	4050118070354	mm, Width: 141 mm, Depth: 16.5 mm, Basic material: Stainless steel
Qty.	1 ST	1.4301, Stainless steel 1.4301 (304), Mirror polished, silver
Type	TPSDHA KTB 130X50 S2 R	Version
Order No.	1283450000	Klippon TB (Terminal Box), Ratings plate holder, Riveted, Height: 50
GTIN (EAN)	4050118073621	mm, Width: 171 mm, Depth: 16.5 mm, Basic material: Stainless steel
Qty.	1 ST	1.4301, Stainless steel 1.4301 (304), Mirror polished, silver
Type	TPSDHA KTB 70X70M3 S2 R	Version
Order No.	1279320000	Klippon TB (Terminal Box), Ratings plate holder, Riveted, Height: 70
GTIN (EAN)	4050118070101	mm, Width: 70 mm, Depth: 20 mm, Basic material: Stainless steel
Qty.	1 ST	1.4301, Stainless steel 1.4301 (304), Mirror polished, silver

KTB MH 352615 S4N4

Weidmüller Interface GmbH & Co. KG
Klingenbergstraße 26
D-32758 Detmold
Germany

www.weidmueller.com

Accessories

Installation material

Integrate, expand and customise - the perfect supplement to every application
The fully structured range of system accessories for the new Klippon® TB enclosure series allows you to easily adapt the enclosures to meet the specific requirements of every application.
Mounting hardware kits
Mounting hardware kits are available for quick and easy installation of type label holders, document holders and rain hoods.
The label fastening set – SD is required to install a plastic (Trafolyte) ID or type label. With the aid of this set can you mount the ID or type label directly on the enclosure cover. The label fastening set has been specially developed for this purpose. Only by using this fastening set can you ensure that there will be no leaks into the enclosure or damage to the label.
The universal fastening set – TPSD has been developed to enable secure and quick installation of type label holders, rain covers or document holders, for example. By using this fastening set, the risk of leaks can be minimised, if not avoided.

General ordering data

Type	SD FIXING SET	Version
Order No.	1285200000	Klippon TB (Terminal Box), Identification plate fixing set, Height: 12
GTIN (EAN)	4050118075472	mm, Width: 12 mm, Depth: 16.4 mm, Basic material: Stainless steel,
Qty.	1 ST	rust-proof, untreated, silver
Type	TPSD FIXING SET KTB	Version
Order No.	1252190000	Klippon TB (Terminal Box), Type plate fixings set, Basic material:
GTIN (EAN)	4050118043969	Stainless steel, rust-proof, untreated, silver
Qty.	20 ST	

Earthing stud

Integrate, expand and customise: The ideal expansion for every application
The consistent structure of accessories for the new Klippon® TB enclosure range means that you can easily adapt the enclosure to the specific requirements of each application.
Earthing bolt
Earthing bolts to exchange as a complete component in two versions – brass and stainless steel.

General ordering data

Type	PEBZ M10 KTB BR SET	Version
Order No.	1192680000	Klippon TB (Terminal Box), Earthing stud, Miscellaneous, Height:
GTIN (EAN)	4032248974641	21 mm, Width: 21 mm, Depth: 48.7 mm, Basic material: Brass,
Qty.	1 ST	untreated, silver

KTB MH 352615 S4N4

Weidmüller Interface GmbH & Co. KG
Klingenbergstraße 26
D-32758 Detmold
Germany

www.weidmueller.com

Accessories

Type	PEBZ M10 KTB S4 SET	Version
Order No.	1192690000	Klippon TB (Terminal Box), Earthing stud, Miscellaneous, Height: 21
GTIN (EAN)	4032248974658	mm, Width: 21 mm, Depth: 48.7 mm, Basic material: Stainless steel
Qty.	1 ST	1.4404 (316L), untreated, silver

Document holders

Integrate, expand and customise - the perfect supplement to every application
The fully structured range of system accessories for the new Klippon® TB enclosure series allows you to easily adapt the enclosures to meet the specific requirements of every application.
Document holders
Document holders for the proper storage of documents in the enclosure

General ordering data

Type	DOHA KTB A6 S2 R	Version
Order No.	1252780000	Klippon TB (Terminal Box), Document holders, Riveted, Height: 110
GTIN (EAN)	4050118045512	mm, Width: 130 mm, Depth: 20 mm, Basic material: Stainless steel
Qty.	1 ST	1.4301, Stainless steel 1.4301 (304), Mirror polished, silver

Grounding strap

The fully structured range of system accessories for the new Klippon® TB enclosure series allows you to easily adapt the enclosures to meet the specific requirements of every application. The following options are available:
- Closure Elements
- Document holders
- Earthing stud
- Gland plates
- Installation material
- Mounting plates
- Rain hoods
- Spacer
- Terminal rails
- Type label holder

General ordering data

Type	PECD WIRE 6/200/D6 SET	Version
Order No.	2475490000	Klippon TB (Terminal Box), Grounding strap, Ssrewed, Basic material:
GTIN (EAN)	4050118487206	Steel, Green/yellow
Qty.	1 ST	

KTB MH 352615 S4N4

Weidmüller Interface GmbH & Co. KG
Klingenbergstraße 26
D-32758 Detmold
Germany

www.weidmueller.com

Accessories

Stainless steel 1.4404 (316L)

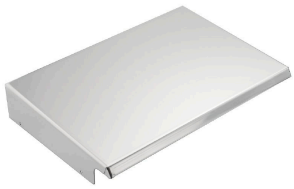

Integrate, expand and customise: The ideal expansion for every application
The consistent structure of accessories for the new Klippon® TB enclosure range means that you can easily adapt the enclosure to the specific requirements of each application.
Rain Covers
The rain cover provides an ideal, additional level of protection for the enclosure if it is installed in unusual climatic zones with, for instance, very heavy rainfall or extreme levels of direct sunlight.

General ordering data

Type	KTB RNHD XX2615 S4E R	Version
Order No.	1314140000	Klippon TB (Terminal Box), Rain hood, Height: 53.4 mm, Width: 265
GTIN (EAN)	4050118117509	mm, Depth: 160.5 mm, Basic material: Stainless steel 1.4404 (316L),
Qty.	1 ST	electropolished, silver

Depth 7.5 mm

Integrate, expand and customise: The ideal expansion for every application
The consistent structure of accessories for the new Klippon® TB enclosure range means that you can easily adapt the enclosure to the specific requirements of each application.
Terminal rails
The mounting rails are available in two sizes for mounting DIN rails (e.g. electronics, terminals) components in the enclosures.

General ordering data

Type	TS35X7.5 ST KTB3526 VER	Version
Order No.	8000006711	Rail, TS 35, TS 35 x 7.5, Width: 295 mm, without slot, Steel,
GTIN (EAN)	4050118652840	galvanized, chromium-plated
Qty.	20 ST	
Type	TS35X7.5 ST KTB3526 HOR	Version
Order No.	8000006721	Rail, TS 35, TS 35 x 7.5, Width: 199 mm, without slot, Steel,
GTIN (EAN)	4050118652895	galvanized, chromium-plated
Qty.	20 ST	

Mounting plates

Mounting plates, with and without hole patterns, for longitudinal and transverse mounting of DIN mounting rails or components directly onto the mounting plate.

KTB MH 352615 S4N4

Weidmüller Interface GmbH & Co. KG
Klingenbergstraße 26
D-32758 Detmold
Germany

www.weidmueller.com

Accessories

General ordering data

Type	GFSC M5X10 TX20 SET	Version
Order No.	1274150000	Klippon EB (Essential Box), Mounting screw, Height: 13.3 mm, Width:
GTIN (EAN)	4050118063820	8.5 mm, Depth: 8.5 mm, Basic material: Steel, galvanized, galvanic
Qty.	1 ST	zinc plated and passivated, silver

Depth 15 mm

Integrate, expand and customise: The ideal expansion for every application
The consistent structure of accessories for the new Klippon® TB enclosure range means that you can easily adapt the enclosure to the specific requirements of each application.
Terminal rails
The mounting rails are available in two sizes for mounting DIN rails (e.g. electronics, terminals) components in the enclosures.

General ordering data

Type	TS35X15 ST KTB3526 HOR	Version
Order No.	8000073113	Rail, TS 35, TS 35 x 15, Width: 199 mm, without slot, Steel, galvanic
GTIN (EAN)	4064675340669	zinc plated and passivated
Qty.	20 ST	
Type	TS35X15 ST KTB3526 VER	Version
Order No.	8000073114	Rail, TS 35, TS 35 x 15, Width: 295 mm, without slot, Steel, galvanic
GTIN (EAN)	4064675340676	zinc plated and passivated
Qty.	20 ST	

Installation material

Integrate, expand and customise - the perfect supplement to every application
The fully structured range of system accessories for the new Klippon® TB enclosure series allows you to easily adapt the enclosures to meet the specific requirements of every application.
Mounting hardware kits
Mounting hardware kits are available for quick and easy installation of type label holders, document holders and rain hoods.
The label fastening set – SD is required to install a plastic (Trafolyte) ID or type label. With the aid of this set can you mount the ID or type label directly on the enclosure cover. The label fastening set has been specially developed for this purpose. Only by using this fastening set can you ensure that there will be no leaks into the enclosure or damage to the label.
The universal fastening set – TPSD has been developed to enable secure and quick installation of type label holders, rain covers or document holders, for example. By using this fastening set, the risk of leaks can be minimised, if not avoided.

KTB MH 352615 S4N4

Weidmüller Interface GmbH & Co. KG
Klingenbergstraße 26
D-32758 Detmold
Germany

www.weidmueller.com

Accessories

General ordering data

Type	FKSC M6X8 D9/SW3	Version
Order No.	0642600000	Klippon TB (Terminal Box), Mounting screw, Basic material: Steel
GTIN (EAN)	4008190058258	
Qty.	50 ST	