Data sheet

SAIL-M23-KSW-7/12

Weidmüller Interface GmbH & Co. KG
Klingenbergstraße 26
D-32758 Detmold
Germany

www.weidmueller.com



The M23 round plug-in connectors offer a high number of mating cycles, high current-carrying capacity and high contact-density coupled with minimum dimensions. Enclosures, inserts and crimp contacts need to be ordered separately.

General ordering data

Version	Sensor/Actuator plug-in connector, Empty enclosure
Order No.	1169930000
Type	SAIL-M23-KSW-7/12
GTIN (EAN)	4032248961993
Qty.	1 items
Delivery status	This article will no longer be available in the future.
Last order date	2026-12-31T00:00:00+01:00

SAIL-M23-KSW-7/12

Weidmüller Interface GmbH & Co. KG
Klingenbergstraße 26
D-32758 Detmold
Germany

www.weidmueller.com

Technical data

Approvals

Approvals	
ROHS	Conform
UL File Number Search	UL Website
Certificate No. (UR)	E344862

Dimensions and weights

Net weight	128 g

Environmental Product Compliance

RoHS Compliance Status	Compliant with exemption
RoHS Exemption (if applicable/known)	6c
REACH SVHC	Lead 7439-92-1, 6,6'-di-tert-butyl-2,2'-methylenedi-p-cresol 119-47-1
SCIP	f34fc414-7303-481d-8a96-44b52af18999

Technical data customisable plug-in connectors

Housing main material	Copper-zinc alloy	Cable diameter, max.	12 mm
Cable diameter, min.	7 mm	Protection degree	IP67, IP69K
Plugging cycles	> 1000	Pollution severity	3
Shield connection	Yes	Temperature range of housing	-40...+125 °C

Classifications

ETIM 8.0	EC003556	ETIM 9.0	EC003556
ETIM 10.0	EC003556	ECLASS 14.0	27-44-02-24
ECLASS 15.0	27-44-02-24		

SAIL-M23-KSW-7/12

Weidmüller Interface GmbH & Co. KG
Klingenbergstraße 26
D-32758 Detmold
Germany

www.weidmueller.com

Drawings

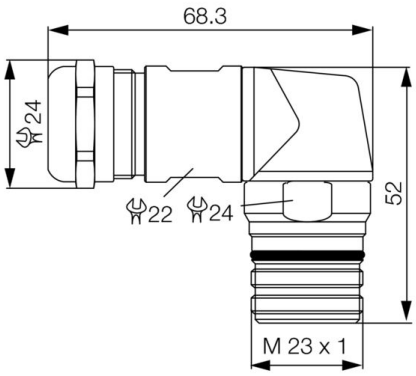

SAIL-M23-KSW-7/12

Weidmüller Interface GmbH & Co. KG
Klingenbergstraße 26
D-32758 Detmold
Germany

www.weidmueller.com

Accessories

Inserts without contacts



The M23 round plug-in connectors offer a high number of mating cycles, high current-carrying capacity and high contact-density coupled with minimum dimensions. Enclosures, inserts and crimp contacts need to be ordered separately.

General ordering data

Type	SAI-M23-BE-12	Version
Order No.	1995850000	Sensor/Actuator plug-in connector, Insert
GTIN (EAN)	4032248926145	
Qty.	1 ST	
Type	SAI-M23-BE-12-G	Version
Order No.	1296730000	Sensor/Actuator plug-in connector, Insert
GTIN (EAN)	4050118094848	
Qty.	1 ST	
Type	SAI-M23-BE-16	Version
Order No.	1170090000	Sensor/Actuator plug-in connector, Insert
GTIN (EAN)	4032248962228	
Qty.	1 ST	
Type	SAI-M23-BE-17	Version
Order No.	1170110000	Sensor/Actuator plug-in connector, Insert
GTIN (EAN)	4032248962198	
Qty.	1 ST	
Type	SAI-M23-BE-19	Version
Order No.	1170130000	Sensor/Actuator plug-in connector, Insert
GTIN (EAN)	4032248962082	
Qty.	1 ST	
Type	SAI-M23-BE-6	Version
Order No.	1170020000	Sensor/Actuator plug-in connector, Insert
GTIN (EAN)	4032248962020	
Qty.	1 ST	
Type	SAI-M23-BE-7	Version
Order No.	1170040000	Sensor/Actuator plug-in connector, Insert
GTIN (EAN)	4032248962006	
Qty.	1 ST	
Type	SAI-M23-BE-9	Version
Order No.	1170060000	Sensor/Actuator plug-in connector, Insert
GTIN (EAN)	4032248962112	
Qty.	1 ST	
Type	SAI-M23-SE-12	Version
Order No.	1170070000	Sensor/Actuator plug-in connector, Insert
GTIN (EAN)	4032248962044	
Qty.	1 ST	
Type	SAI-M23-SE-16	Version
Order No.	1170080000	Sensor/Actuator plug-in connector, Insert
GTIN (EAN)	4032248962136	
Qty.	1 ST	

SAIL-M23-KSW-7/12

Weidmüller Interface GmbH & Co. KG
Klingenbergstraße 26
D-32758 Detmold
Germany

www.weidmueller.com

Accessories

Type	SAI-M23-SE-17	Version
Order No.	1170100000	Sensor/Actuator plug-in connector, Insert
GTIN (EAN)	4032248962181	
Qty.	1 ST	
Type	SAI-M23-SE-19	Version
Order No.	1170120000	Sensor/Actuator plug-in connector, Insert
GTIN (EAN)	4032248962068	
Qty.	1 ST	
Type	SAI-M23-SE-6	Version
Order No.	1170000000	Sensor/Actuator plug-in connector, Insert
GTIN (EAN)	4032248962037	
Qty.	1 ST	
Type	SAI-M23-SE-7	Version
Order No.	1170030000	Sensor/Actuator plug-in connector, Insert
GTIN (EAN)	4032248962143	
Qty.	1 ST	
Type	SAI-M23-SE-9	Version
Order No.	1170050000	Sensor/Actuator plug-in connector, Insert
GTIN (EAN)	4032248962167	
Qty.	1 ST	