Data sheet

SV 7.62HP/05/270MSF3 SC/04R SN BK BX

Weidmüller Interface GmbH & Co. KG
Klingenbergstraße 26
D-32758 Detmold
Germany

www.weidmueller.com

Product image

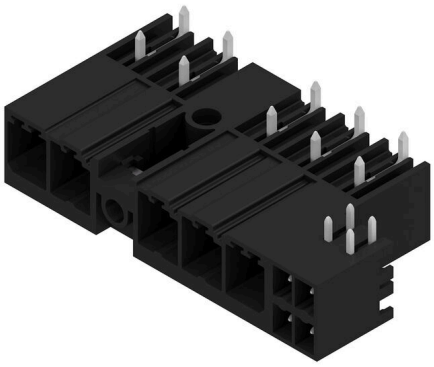

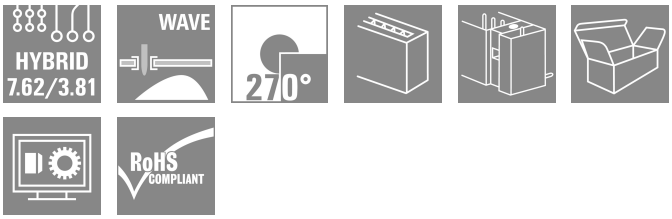

Combined 270° male header with power and signal contacts incl. self-locking middle flange interlock with a 7.62 pitch.
Enables simultaneous connection of power, signals and (optional) EMC shielding. Ideal for connecting servo and asynchronous drives.
Meets the requirements of IEC 61800-5-1 and enables UL approval as per UL840 600 V when combined with female header BVF 7.62HP/...BCF..R...
Without a female header, the mating profile guarantees minimum power-contact touch-safety of >3 mm with 20 N pressure on the test finger.
The self-locking middle flange reduces the space requirements by one pitch width in comparison with conventional solutions.
Optionally on request: without flange fastening, with additional screw mount or with soldered flange fastening.

General ordering data

Version	PCB plug-in connector, male header, closed side, Middle screw flange, THT solder connection, 7.62 mm, Number of poles: 5, 270°, Solder pin length (l): 3.5 mm, tinned, black, Box
Order No.	1156370000
Type	SV 7.62HP/05/270MSF3 SC/04R SN BK BX
GTIN (EAN)	4032248943067
Qty.	30 items
Product data	IEC: 1000 V / 41 A UL: 300 V / 35 A
Packaging	Box

SV 7.62HP/05/270MSF3 SC/04R SN BK BX

Weidmüller Interface GmbH & Co. KG
Klingenbergstraße 26
D-32758 Detmold
Germany

www.weidmueller.com

Technical data

Approvals

Approvals	
ROHS	Conform
UL File Number Search	UL Website
Certificate No. (cURus)	E60693

Dimensions and weights

Depth	28.3 mm	Depth (inches)	1.1142 inch
Height	14.9 mm	Height (inches)	0.5866 inch
Height of lowest version	11.4 mm	Width	54.31 mm
Width (inches)	2.1382 inch	Net weight	2 g

Environmental Product Compliance

RoHS Compliance Status	Compliant without exemption
REACH SVHC	No SVHC above 0.1 wt%

System specifications

Product family	OMNIMATE Power - series BV/SV 7.62HP	Type of connection	Board connection
Mounting onto the PCB	THT solder connection	Pitch in mm (P)	7.62 mm
Pitch in inches (P)	0.300 "	Outgoing elbow	270°
Number of poles	5	Number of solder pins per pole	2
Solder pin length (l)	3.5 mm	Solder pin length tolerance	+0.1 / -0.3 mm
Solder pin dimensions	0.8 x 1.0 mm	Solder eyelet hole diameter (D)	1.4 mm
Solder eyelet hole diameter tolerance (D)	+ 0,1 mm	L1 in mm	38.10 mm
L1 in inches	1.500 "	L2 in mm	3.81 mm
L2 in inch	0.150 "	Number of rows	1
Pin series quantity	1	Touch-safe protection acc. to DIN VDE 57 106	safe to back of hand above the printed circuit board
Touch-safe protection acc. to DIN VDE 0470	IP 20	Volume resistance	2.00 mΩ
Can be coded	Yes	Tightening torque for screw flange, min.	0.2 Nm
Tightening torque for screw flange, max.	0.3 Nm	Plugging cycles	25
Plugging force/pole, max.	12 N	Pulling force/pole, max.	7 N

Material data

Insulating material	PA GF	Colour	black
Colour chart (similar)	RAL 9011	Insulating material group	II
Comparative Tracking Index (CTI)	≥ 500	Moisture Level (MSL)	
UL 94 flammability rating	V-0	Contact material	Cu-alloy
Contact surface	tinned	Layer structure of solder connection	1...3 µm Ni / 4...6 µm Sn matt
Layer structure of plug contact	1...3 µm Ni / 4...6 µm Sn matt	Storage temperature, min.	-40 °C
Storage temperature, max.	70 °C	Operating temperature, min.	-50 °C
Operating temperature, max.	130 °C	Temperature range, installation, min.	-25 °C
Temperature range, installation, max.	130 °C		

SV 7.62HP/05/270MSF3 SC/04R SN BK BX

Weidmüller Interface GmbH & Co. KG
Klingenbergstraße 26
D-32758 Detmold
Germany

www.weidmueller.com

Technical data

Rated data acc. to IEC

tested acc. to standard	IEC 60664-1, IEC 61984	Rated current, min. number of poles (Tu=20°C)	41 A
Rated current, max. number of poles (Tu=20°C)	41 A	Rated current, min. number of poles (Tu=40°C)	41 A
Rated current, max. number of poles (Tu=40°C)	41 A	Rated voltage for surge voltage class / pollution degree II/2	1000 V
Rated voltage for surge voltage class / pollution degree III/2	630 V	Rated voltage for surge voltage class / pollution degree III/3	630 V
Rated impulse voltage for surge voltage class/ pollution degree II/2	6 kV	Rated impulse voltage for surge voltage class/ pollution degree III/2	6 kV
Rated impulse voltage for surge voltage class/ contamination degree III/3	6 kV	Short-time withstand current resistance	3 x 1s with 420 A

Rated data acc. to CSA

Institute (CSA)	CSA	Certificate No. (CSA)	200039-1121690
Rated voltage (Use group B / CSA)	300 V	Rated voltage (Use group C / CSA)	300 V
Rated voltage (Use group D / CSA)	600 V	Rated current (Use group B / CSA)	33 A
Rated current (Use group C / CSA)	33 A	Rated current (Use group D / CSA)	5 A
Reference to approval values	Specifications are maximum values, details - see approval certificate.		

Rated data acc. to UL 1059

Institute (cURus)	CURUS	Certificate No. (cURus)	E60693
Rated voltage (Use group B / UL 1059)	300 V	Rated voltage (Use group C / UL 1059)	300 V
Rated voltage (Use group D / UL 1059)	600 V	Rated current (Use group B / UL 1059)	35 A
Rated current (Use group C / UL 1059)	33 A	Rated current (Use group D / UL 1059)	5 A
Creepage distance, min.	9.6 mm	Clearance distance, min.	6.9 mm
Reference to approval values	Specifications are maximum values, details - see approval certificate.		

Packing

Packaging	Box	VPE length	351.00 mm
VPE width	136.00 mm	VPE height	41.00 mm

Technical data - hybrid

Pitch in mm (hybrid)	nominal	3.81 mm
	Hybrid component	Signal
Pitch in mm (Signal)	3.81 mm	
Pitch in inch (hybrid)	nominal	0.15 "
	Hybrid component	Signal
Pitch in inches (Signal)	0.15 "	
Pole count (hybrid)	nominal	4
	Hybrid component	Signal
Number of poles (Signal)	4	
Number of solder pins per pole (hybrid)	Hybrid component	Signal
	nominal	1
Number of solder pins per pole (Signal)	1	
Solder pin dimensions (hybrid)	Solder pin dimensions	0.8 x 0.8 mm
	Hybrid component	Signal
Solder pin dimensions (Signal)	0.8 x 0.8 mm	

SV 7.62HP/05/270MSF3 SC/04R SN BK BX

Weidmüller Interface GmbH & Co. KG
Klingenbergstraße 26
D-32758 Detmold
Germany

www.weidmueller.com

Technical data

Solder pin dimensions = d tolerance (hybrid)	Solder pin dimensions = d tolerance	Lower tolerance with prefix (reveals minimum)	-0,03	
		Upper tolerance with prefix (reveals maximum)	+0,01	
		Tolerance, unit	mm	
	Hybrid component	Signal		
Solder pin dimensions = d tolerance (Signal)	-0,03 / +0,01 mm			
Diameter of solder eyelet (hybrid)	Hybrid component	Signal		
	nominal	1.3 mm		
PCB hole diameter (Signal)	1.3 mm			
Tolerance of the diameter of the solder eyelet (hybrid)	Hybrid component	Signal		
	Solder eyelet hole diameter tolerance (D)	± 0.1 mm		
PCB hole diameter tolerance (Signal)	± 0.1 mm			
L2 in mm	3.81 mm			
L2 in inch	0.150 "			
Number of rows (hybrid)	Hybrid component	Signal		
Number of rows (Signal)	2			
Contact material (hybrid)	Hybrid component	Signal		
	Contact material	CuMg		
Contact material (Signal)	CuMg			
Contact surface (hybrid)	Hybrid component	Signal		
	Contact surface	tinned		
Contact surface (Signal)	tinned			
Layer structure of the solder connection (hybrid)	Layer structure of the solder connection	Material	Ni	
		Layer strength	min.	1 µm
			max.	3 µm
		Material	Sn	
		Layer strength	min.	4 µm
			max.	8 µm
	Hybrid component	Signal		
Layer structure of the solder connection (Signal)	1-3 µm Ni / 4-8 µm Sn			
Layer structure of the plug contact (hybrid)	Layer structure of the plug contact	Material	Ni	
		Layer strength	min.	1 µm
			max.	3 µm
		Material	Sn	
		Layer strength	min.	4 µm
			max.	8 µm
	Hybrid component	Signal		
Layer structure of the plug contact (Signal)	1-3 µm Ni / 4-8 µm Sn			
Rated voltage for overvoltage class / pollution severity level II/2 (hybrid)	Hybrid component	Signal		
	nominal	320 V		
Rated voltage for overvoltage class/ pollution severity level II/2 (Signal)	320 V			
Rated voltage for overvoltage class / pollution severity level III/2 (hybrid)	Hybrid component	Signal		
	nominal	160 V		
Rated voltage for overvoltage class/ pollution severity level III/2 (Signal)	160 V			
Rated voltage for overvoltage class / pollution severity level III/3 (hybrid)	Hybrid component	Signal		
	nominal	160 V		
Rated voltage for overvoltage class/ pollution severity level III/3 (Signal)	160 V			
Rated impulse voltage for overvoltage class / pollution severity level II/2 (hybrid)	Hybrid component	Signal		
	nominal	2.5 kV		

SV 7.62HP/05/270MSF3 SC/04R SN BK BX

Weidmüller Interface GmbH & Co. KG
Klingenbergstraße 26
D-32758 Detmold
Germany

www.weidmueller.com

Technical data

Rated impulse voltage for overvoltage class/pollution severity level II/2 (Signal)	2.5 kV	
Rated impulse voltage for overvoltage class / pollution severity level III/2 (hybrid)	Hybrid component	Signal
	nominal	2.5 kV
Rated impulse voltage for overvoltage class/pollution severity level III/2 (Signal)	2.5 kV	
Rated impulse voltage for overvoltage class / pollution severity level III/3 (hybrid)	Hybrid component	Signal
	nominal	2.5 kV
Rated impulse voltage for overvoltage class/pollution severity level III/3 (Signal)	2.5 kV	
Rated current, number of poles (Tu=40°C) (hybrid)	Hybrid component	Signal
	min.	12.7 A
Rated current, number of poles (Tu=20°C) (hybrid)	Hybrid component	Signal
	min.	14.2 A
Short-time withstand current capacity (hybrid)	Short-time withstand current resistance	3 x 1s with 80 A
	Hybrid component	Signal
Short-time withstand current resistance (Signal)	3 x 1s with 80 A	
Creepage distance (hybrid)	Hybrid component	Signal
	min.	4.38 mm
Clearance distance (hybrid)	Hybrid component	Signal
	min.	3.6 mm
Rated voltage (Use group B / CSA) (Hybrid)	Hybrid component	Signal
	nominal	300 V
Rated voltage (Use group B / CSA) (Signal)	300 V	
Rated voltage (Use group C / CSA) (Hybrid)	Hybrid component	Signal
	nominal	50 V
Rated voltage (Use group C / CSA) (Signal)	50 V	
Rated current (Use group B / CSA) (Hybrid)	Hybrid component	Signal
	nominal	9 A
Rated current (Use group B / CSA) (Signal)	9 A	
Rated current (Use group C / CSA) (Hybrid)	Hybrid component	Signal
	nominal	9 A
Rated current (Use group C / CSA) (Signal)	9 A	
Rated current (Use group D / CSA) (Hybrid)	Hybrid component	Signal
	nominal	9 A
Rated current (Use group D / CSA) (Signal)	9 A	
Rated voltage (Use group B / UL 1059) (Hybrid)	Hybrid component	Signal
	nominal	300 V
Rated voltage (Use group B / UL 1059] (Signal)	300 V	
Rated voltage (Use group C / UL 1059) (Hybrid)	Hybrid component	Signal
	nominal	50 V
Rated voltage (Use group C / UL 1059] (Signal)	50 V	
Rated voltage (Use group D / UL 1059) (Hybrid)	Hybrid component	Signal
Rated current (Use group B / UL 1059) (Hybrid)	Hybrid component	Signal
	nominal	5 A
Rated current (Use group B / UL 1059) (Signal)	5 A	

SV 7.62HP/05/270MSF3 SC/04R SN BK BX

Weidmüller Interface GmbH & Co. KG
Klingenbergstraße 26
D-32758 Detmold
Germany

www.weidmueller.com

Technical data

Rated current (Use group C / UL 1059) (Hybrid)	Hybrid component	Signal
	nominal	5 A
Rated current (Use group C / UL 1059) (Signal)	5 A	
Rated current (Use group D / UL 1059) (Hybrid)	Hybrid component	Signal

Important note

IPC conformity	Conformity: The products are developed, manufactured and delivered according international recognized standards and norms and comply with the assured properties in the data sheet resp. fulfill decorative properties in accordance with IPC-A-610 "Class 2". Further claims on the products can be evaluated on request.
Notes	• Technical specifications refer to the power contacts • Technical data of signal contacts: 50V / 5A, stripping length 8mm • Rated current related to rated cross-section & min. No. of poles. • Specifications of diagram: P1=7.62 mm; P2=3.81 mm • Rated data refer only to the component itself. Clearance and creepage distances to other components are to be designed in accordance with the relevant application standards. • MFX and MSFX: X= Position of the middle flange e.g. MF2, MSF3 • In accordance with IEC 61984, OMNIMATE-connectors are connectors without breaking capacity (COC). During designated use, connectors are not allowed to be engaged or disengaged when live or under load • Long term storage of the product with average temperature of 50 °C and maximum humidity 70%, 36 months

Classifications

ETIM 8.0	EC002637	ETIM 9.0	EC002637
ETIM 10.0	EC002637	ECLASS 14.0	27-46-03-01
ECLASS 15.0	27-46-03-01		

SV 7.62HP/05/270MSF3 SC/04R SN BK BX

Weidmüller Interface GmbH & Co. KG
Klingenbergstraße 26
D-32758 Detmold
Germany

www.weidmueller.com

Drawings

Product image

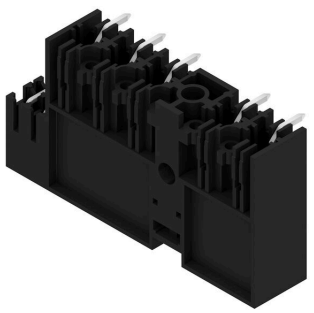

Dimensional drawing

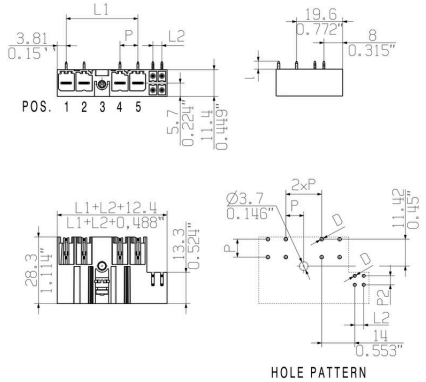

Dimensional drawing

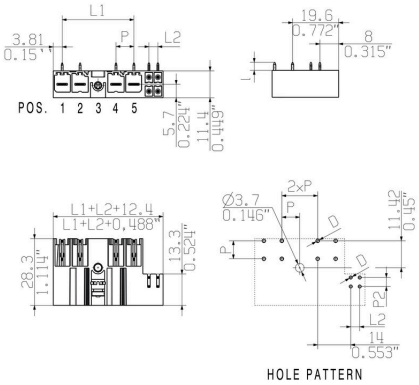

SV 7.62HP/05/270MSF3 SC/04R SN BK BX

Weidmüller Interface GmbH & Co. KG
Klingenbergstraße 26
D-32758 Detmold
Germany

www.weidmueller.com

Accessories

Coding elements

The pluggable connections for power electronics - optimised for modern drive technologies, e.g. motor starters, frequency converters and servo-controllers. OMNIMATE Power sets the new standard – with increased safety and innovative solutions such as the pluggable shield, integrated signal contacts and one-handed operation.
The three product lines offer you further advantages:

- Application-oriented scalability: from the compact 4 mm² connector for 29 A (IEC) or 20 A (UL) up to the sturdy 16 mm² connector for 76 A (IEC) or 54 A (UL)
- Unlimited usage up to 1,000 V (IEC) or 600 V (UL)
- A variety of application optimised mounting options

Our service:
Design your individual connectors simply by using the product configurator.

General ordering data

Type	BV/SV 7.62HP KO	Version
Order No.	1937590000	PCB plug-in connector, Accessories, Coding element, black, Number
GTIN (EAN)	4032248608881	of poles: 1
Qty.	50 ST	