Data sheet

SL 5.08HC/23/180 3.2SN OR BX

Weidmüller Interface GmbH & Co. KG
Klingenbergstraße 26
D-32758 Detmold
Germany

www.weidmueller.com

Product image

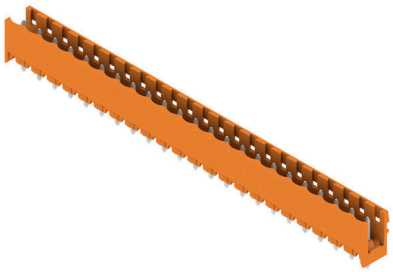

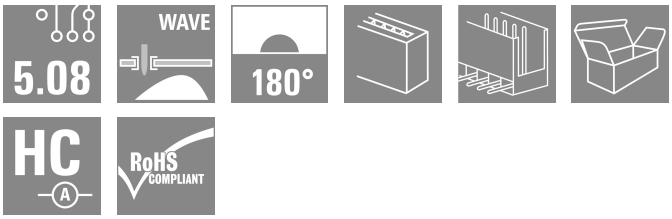

Pin headers in glass-fibre-reinforced plastic with straight wire outlet; optimised for wave soldering. The flange variant (F) can be screwed onto the respective counter piece or the circuit board. There is no need for an extra screw to connect the circuit board when the solder flange (LF) version is used. This also protects the solder points from mechanical strain. All pin headers can be manually coded or ordered pre-coded. HC = High Current.

General ordering data

Version	PCB plug-in connector, male header, open side, THT solder connection, 5.08 mm, Number of poles: 23, 180°, Solder pin length (l): 3.2 mm, tinned, orange, Box
Order No.	1146700000
Type	SL 5.08HC/23/180 3.2SN OR BX
GTIN (EAN)	4032248108701
Qty.	20 items
Product data	IEC: 400 V / 24 A UL: 300 V / 18.5 A
Packaging	Box

SL 5.08HC/23/180 3.2SN OR BX

Weidmüller Interface GmbH & Co. KG
Klingenbergstraße 26
D-32758 Detmold
Germany

www.weidmueller.com

Technical data

Approvals

Approvals	
ROHS	Conform
UL File Number Search	UL Website
Certificate No. (cURus)	E60693

Dimensions and weights

Depth	8.43 mm	Depth (inches)	0.3319 inch
Height	15.2 mm	Height (inches)	0.5984 inch
Height of lowest version	12 mm	Width	116.64 mm
Width (inches)	4.5921 inch	Net weight	6.18 g

Environmental Product Compliance

RoHS Compliance Status	Compliant without exemption	
REACH SVHC	No SVHC above 0.1 wt%	
Product Carbon Footprint	Cradle to gate	0,098 kg CO2 eq.

System specifications

Product family	OMNIMATE Signal - series BL/SL 5.08	Type of connection	Board connection
Mounting onto the PCB	THT solder connection	Pitch in mm (P)	5.08 mm
Pitch in inches (P)	0.200 "	Outgoing elbow	180°
Number of poles	23	Number of solder pins per pole	1
Solder pin length (l)	3.2 mm	Solder pin length tolerance	+0.1 / -0.3 mm
Solder pin dimensions	d = 1.2 mm, Octagonal	Solder pin dimensions = d tolerance	0 / -0,03 mm
Solder eyelet hole diameter (D)	1.5 mm	Solder eyelet hole diameter tolerance (D)	+ 0,1 mm
L1 in mm	111.76 mm	L1 in inches	4.400 "
Number of rows	1	Pin series quantity	1
Touch-safe protection acc. to DIN VDE 57 106	finger-safe unplugged/ back-of-hand-safe plugged	Touch-safe protection acc. to DIN VDE 0470	IP20 plugged/ IP10 unplugged
Protection degree	IP20	Volume resistance	≤5 mΩ
Can be coded	Yes	Plugging cycles	25
Plugging force/pole, max.	10 N	Pulling force/pole, max.	7.5 N

Material data

Insulating material	PA GF	Colour	orange
Colour chart (similar)	RAL 2000	Insulating material group	II
Comparative Tracking Index (CTI)	≤ 600	Moisture Level (MSL)	
UL 94 flammability rating	V-0	Contact material	Cu-alloy
Contact surface	tinned	Layer structure of solder connection	1...3 µm Ni / 2...4 µm Sn matt
Layer structure of plug contact	1...3 µm Ni / 2...4 µm Sn matt	Storage temperature, min.	-40 °C
Storage temperature, max.	70 °C	Operating temperature, min.	-50 °C
Operating temperature, max.	100 °C	Temperature range, installation, min.	-25 °C
Temperature range, installation, max.	100 °C		

SL 5.08HC/23/180 3.2SN OR BX

Weidmüller Interface GmbH & Co. KG
Klingenbergstraße 26
D-32758 Detmold
Germany

www.weidmueller.com

Technical data

Rated data acc. to IEC

tested acc. to standard	IEC 60664-1, IEC 61984	Rated current, min. number of poles (Tu=20°C)	24 A
Rated current, max. number of poles (Tu=20°C)	19 A	Rated current, min. number of poles (Tu=40°C)	21 A
Rated current, max. number of poles (Tu=40°C)	16.5 A	Rated voltage for surge voltage class / pollution degree II/2	400 V
Rated voltage for surge voltage class / pollution degree III/2	320 V	Rated voltage for surge voltage class / pollution degree III/3	250 V
Rated impulse voltage for surge voltage class/ pollution degree II/2	4 kV	Rated impulse voltage for surge voltage class/ pollution degree III/2	4 kV
Rated impulse voltage for surge voltage class/ contamination degree III/3	4 kV		

Rated data acc. to CSA

Institute (CSA)	CSA	Certificate No. (CSA)	200039-1121690
Rated voltage (Use group B / CSA)	300 V	Rated voltage (Use group D / CSA)	300 V
Rated current (Use group B / CSA)	18.5 A	Rated current (Use group D / CSA)	18.5 A
Reference to approval values	Specifications are maximum values, details - see approval certificate.		

Rated data acc. to UL 1059

Institute (cURus)	CURUS	Certificate No. (cURus)	E60693
Rated voltage (Use group B / UL 1059)	300 V	Rated voltage (Use group D / UL 1059)	300 V
Rated current (Use group B / UL 1059)	18.5 A	Rated current (Use group D / UL 1059)	10 A
Reference to approval values	Specifications are maximum values, details - see approval certificate.		

Packing

Packaging	Box	VPE length	152.00 mm
VPE width	134.00 mm	VPE height	36.00 mm

Important note

IPC conformity	Conformity: The products are developed, manufactured and delivered according international recognized standards and norms and comply with the assured properties in the data sheet resp. fulfill decorative properties in accordance with IPC-A-610 "Class 2". Further claims on the products can be evaluated on request.
Notes	• Additional variants on request • Gold-plated contact surfaces on request • Rated current related to rated cross-section & min. No. of poles. • Diameter of solder eyelet D = 1.4+0.1mm • Solder eyelet diameter D = 1.5 + 0.1 mm, from 9 poles • P on drawing = pitch • Rated data refer only to the component itself. Clearance and creepage distances to other components are to be designed in accordance with the relevant application standards. • In accordance with IEC 61984, OMNIMATE-connectors are connectors without breaking capacity (COC). During designated use, connectors are not allowed to be engaged or disengaged when live or under load • Long term storage of the product with average temperature of 50 °C and maximum humidity 70%, 36 months

SL 5.08HC/23/180 3.2SN OR BX

Weidmüller Interface GmbH & Co. KG
Klingenbergstraße 26
D-32758 Detmold
Germany

www.weidmueller.com

Technical data

Classifications

ETIM 8.0	EC002637	ETIM 9.0	EC002637
ETIM 10.0	EC002637	ECLASS 14.0	27-46-02-01
ECLASS 15.0	27-46-02-01		

SL 5.08HC/23/180 3.2SN OR BX

Weidmüller Interface GmbH & Co. KG
Klingenbergstraße 26
D-32758 Detmold
Germany

www.weidmueller.com

Drawings

Product image

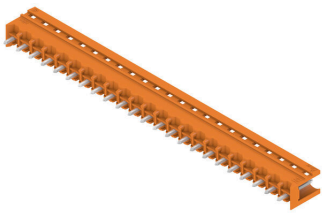

Dimensional drawing

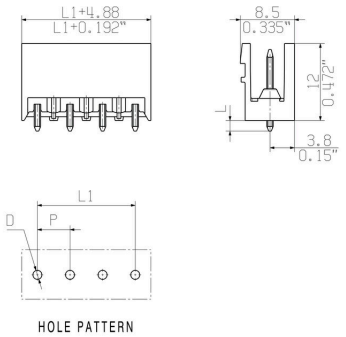

Graph

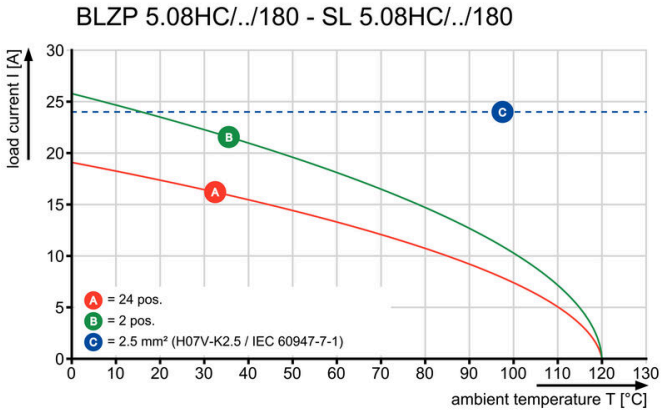

Graph

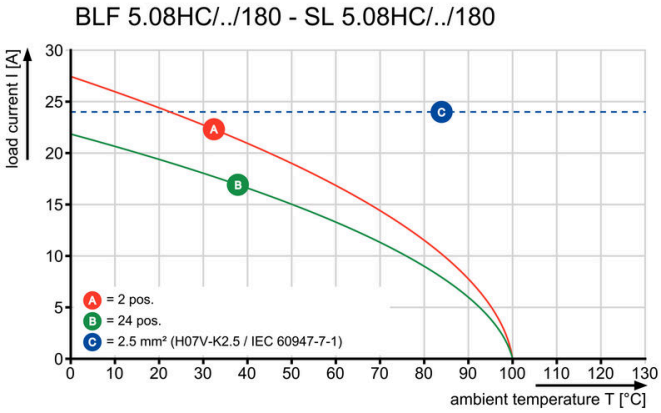

Graph

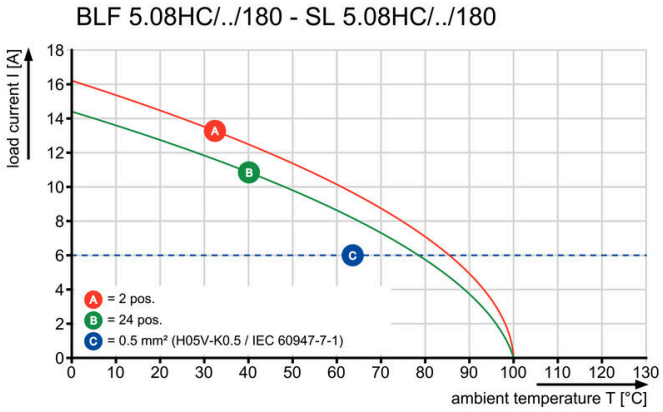

Product benefits

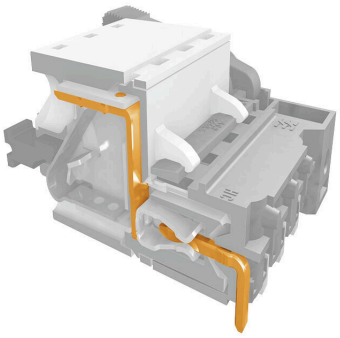

Safe power transmissionProven properties