Data sheet

HDC IP68 10B FRAME M6

Weidmüller Interface GmbH & Co. KG
Klingenbergstraße 26
D-32758 Detmold
Germany

www.weidmueller.com

The new RockStar® enclosures are resistant to seawater and offer a high degree of shock resistance, meet IP 68 and IP 69K, and have been developed for use under extreme environmental conditions and designed for the high vibration requirements acc. to DIN EN 61373 cat. 2 (bogie). As such, this housing family is ideally suited for fault- and maintenance-free operation of heavy-duty connectors in transport and traffic engineering as well as in power engineering and in applications with extreme requirements. During development, measures were also implemented to make the enclosures extremely EMC-resistant.

General ordering data

Version	HDC enclosures, Installation size: 4, Protection degree: IP66, IP68, in plugged condition, Counter frame, Clamping yoke connection, Standard, Size of cable entries: none
Order No.	1110900000
Type	HDC IP68 10B FRAME M6
GTIN (EAN)	4032248886968
Qty.	1 items

HDC IP68 10B FRAME M6

Weidmüller Interface GmbH & Co. KG
Klingenbergstraße 26
D-32758 Detmold
Germany

www.weidmueller.com

Technical data

Approvals

Approvals	
ROHS	Conform

Dimensions and weights

Depth	109 mm	Depth (inches)	4.2913 inch
Height	13 mm	Height (inches)	0.5118 inch
Width	58 mm	Width (inches)	2.2835 inch
Mounting dimension - height	32 mm	Mounting dimension - width	83 mm
Net weight	66 g		

Temperatures

Limit temperature	-50 °C ... 125 °C

Environmental Product Compliance

RoHS Compliance Status	Compliant without exemption	
REACH SVHC	No SVHC above 0.1 wt%	
Chemical resistance	Substance	Acetone
	Chemical resistance	Resistant
	Substance	Diesel oil
	Chemical resistance	Unstable
	Substance	Ethyl alcohol
	Chemical resistance	Resistant
	Substance	Transmission oil
	Chemical resistance	Conditionally resistant
	Substance	Hydraulic oil
	Chemical resistance	Conditionally resistant
	Substance	Petroleum benzine
	Chemical resistance	Unstable
	Substance	Sweat
	Chemical resistance	Conditionally resistant
	Substance	Premium gasoline
	Chemical resistance	Unstable
	Substance	Water
	Chemical resistance	Resistant
	Substance	UV
	Chemical resistance	Resistant
	Substance	Ozone
	Chemical resistance	Resistant

Dimensions

Hole pitch length A2	83 mm	Cable entry	No
Total length housing	109 mm		

General data

Surface finish	untreated	Protection degree	IP66, IP68, in plugged condition

HDC IP68 10B FRAME M6

Weidmüller Interface GmbH & Co. KG
Klingenbergstraße 26
D-32758 Detmold
Germany

www.weidmueller.com

Technical data

Version

Number of cable glands	0	Size of cable entries	none
Top part/bottom part/lid	lower part	Cover	without cover
Number of cable entry sideways	0	Design of housing	Counter frame
Design of locking system	Clamping yoke connection	Design	Standard
Installation size	4	Cable entry	No
Type	Bulkhead (feed-through)	Sealing	no sealing
Colour (RAL)	RAL 7001, RAL 9005	BG	4
Suitable for ModuPlug®	Yes		

Classifications

ETIM 8.0	EC000437	ETIM 9.0	EC000437
ETIM 10.0	EC000437	ECLASS 14.0	27-44-02-02
ECLASS 15.0	27-44-02-02		

HDC IP68 10B FRAME M6

Weidmüller Interface GmbH & Co. KG
Klingenbergstraße 26
D-32758 Detmold
Germany

www.weidmueller.com
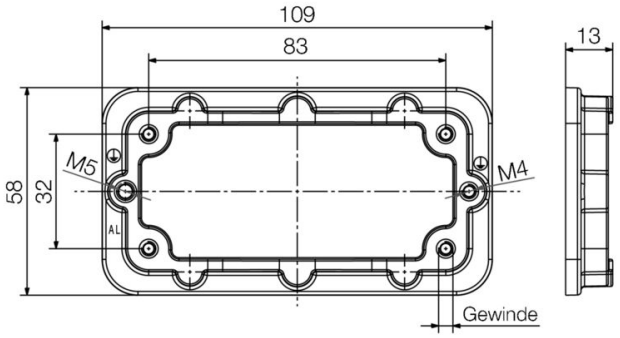
Drawings