Data sheet

SAIL-M12BW-4-2L3.0UGE

Weidmüller Interface GmbH & Co. KG
Klingenbergstraße 26
D-32758 Detmold
Germany

www.weidmueller.com





Sensor/actuator cables are used for wiring sensors and actuators and for transmitting data or power in various applications. The moulded cable offers connected and tested connection of the plug-in connector to the cable ex-works. The cables may be exposed to a wide range of conditions, such as humidity, dust, heat, cold, shock or vibration.
Our developers have focused specifically on this issue and designed a host of different M8 and M12 sensor-actuator cables so you are bound to find the solution you need for your application.
Is there something you have not managed to find or you feel needs explanation? Talk to us!

General ordering data

Version	Sensor/actuator line, One end without connector, M12, Number of poles : 4, 3 m, Socket, angled, Shielded: No, LED: Yes, Sheath material: PUR, Halogen: No
Order No.	1092950300
Type	SAIL-M12BW-4-2L3.0UGE
GTIN (EAN)	4032248865802
Qty.	1 items

Data sheet

SAIL-M12BW-4-2L3.0UGE

Weidmüller Interface GmbH & Co. KG
Klingenbergstraße 26
D-32758 Detmold
Germany

www.weidmueller.com

Technical data

Approvals

Approvals	
ROHS	Conform
UL File Number Search	UL Website
Certificate No. (UL)	E307231

Dimensions and weights

Net weight	92.4 g

Environmental Product Compliance

RoHS Compliance Status	Compliant with exemption
RoHS Exemption (if applicable/known)	6c, 7cl
REACH SVHC	Lead 7439-92-1
SCIP	1c533b66-fcff-4da5-b89f-fd55fbf5cb55

Technical specifications for cable

Cable length	3 m	Sheathing colour	yellow
Resistance to oils	in accordance with IEC 60811:404	Suitable for cable carriers	Yes
Core cross-section	0.34 mm²	Shielded	No
Halogen	No	Insulation	PP
Acceleration	5 m/s²	Bending radius, min., moving	10 x cable diameter
Bending radius, min., stationary	5 x cable diameter	Bending cycles	5 Mio
Resistance to spread of flame	In accordance with UL1581 UL / CUL FT2, in accordance with IEC 60332-2-2	Speed	5 m/s
Sheath material	PUR	Cable length configurable	No
LABS-free	Yes	Hydrolysis and microbe resistant	Yes
Outer cladding in accordance with UL AWM style	20549 (80 °C / 300 V)	Core in accordance with UL AWM style	10493 (80 °C / 300 V)
Irradiation crosslinked	No	Welding spark resistance	No
Colour coding	brown, white, blue, black	Torsion resistance	360 °/m
Temperature range, stationary	-40...80 °C	Resistant to welding beads	No
Bending cycles at torsion	> 5 Mio.	Temperature range, moving	-25...80 °C
Torsional length	1 m	Number of poles	4
Outside diameter	4.7 mm ± 0.2 mm		

General technical data

Coding	A-coded	Connection thread	M12
Contact surface	Gold-plated	LED	Yes
Version	Socket, angled	Housing main material	PUR
Insulation resistance	108 Ω	Nominal voltage	24 V
Nominal current	4 A	Protection degree	IP67, IP68, when screwed in, IP65, IP66
Plugging cycles	≥ 100	Pollution severity	3
jumpered	No	Threaded ring material	Brass, nickel-plated
Temperature range of housing	-25...+85 °C	Tightening torque	M12: 0.8 - 1.2 Nm

SAIL-M12BW-4-2L3.0UGE

Weidmüller Interface GmbH & Co. KG
Klingenbergstraße 26
D-32758 Detmold
Germany

www.weidmueller.com

Technical data

Electrical properties

Insulation resistance	108 Ω	Nominal voltage	24 V

General standards

Connector standard	IEC 61076-2-101	Certificate No. (UL)	E307231
Certificate No. (CSA)	200039-2372994		

Standards

Connector standard	IEC 61076-2-101

Plug, left

Plug left	M12, A-coded, IP69, female contact, angled 90°, Plastic, LED, unshielded

Plug, right

Plug right	free conductor end

Classifications

ETIM 8.0	EC001855	ETIM 9.0	EC001855
ETIM 10.0	EC001855	ECLASS 14.0	27-06-03-11
ECLASS 15.0	27-06-03-11		

SAIL-M12BW-4-2L3.0UGE

Weidmüller Interface GmbH & Co. KG
Klingenbergstraße 26
D-32758 Detmold
Germany

www.weidmueller.com

Drawings

Dimensioned drawing

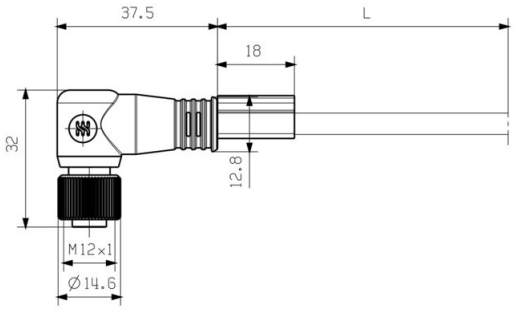

Angled socket

Pole scheme

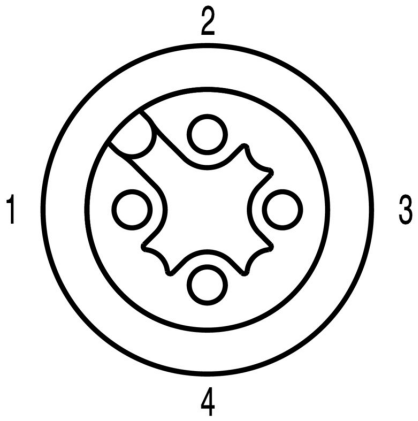

Socket

Wiring diagram

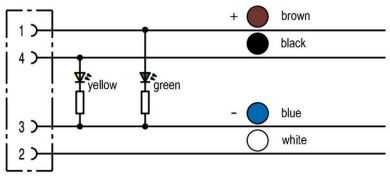

The ideal tool: Screwty ® with torque function

Light, securely screwed-in round plug-in connectors. Screwty set DM / VPE: 1 / Order No.: 1920000000 Adapters: M12, M12 F, M8, M8 F

SAIL-M12BW-4-2L3.0UGE

Weidmüller Interface GmbH & Co. KG
Klingenbergstraße 26
D-32758 Detmold
Germany

www.weidmueller.com

Drawings