Data sheet

HDC IP68 24B TSS 1M32

Weidmüller Interface GmbH & Co. KG
Klingenbergstraße 26
D-32758 Detmold
Germany

www.weidmueller.com

The new RockStar® enclosures are resistant to seawater and offer a high degree of shock resistance, meet IP 68 and IP 69K, and have been developed for use under extreme environmental conditions and designed for the high vibration requirements acc. to DIN EN 61373 cat. 2 (bogie). As such, this housing family is ideally suited for fault- and maintenance-free operation of heavy-duty connectors in transport and traffic engineering as well as in power engineering and in applications with extreme requirements. During development, measures were also implemented to make the enclosures extremely EMC-resistant.

General ordering data

Version	HDC enclosures, Installation size: 8, Protection degree: IP66, IP68, IP69, in plugged condition, Plug housing, Clamping yoke connection, Standard, Size of cable entries: M 32
Order No.	1082970000
Type	HDC IP68 24B TSS 1M32
GTIN (EAN)	4032248846337
Qty.	1 items

HDC IP68 24B TSS 1M32

Weidmüller Interface GmbH & Co. KG
Klingenbergstraße 26
D-32758 Detmold
Germany

www.weidmueller.com

Technical data

Approvals

Approvals	
ROHS	Conform

Dimensions and weights

Height	110.5 mm	Height (inches)	4.3504 inch
Width	58 mm	Width (inches)	2.2835 inch
Net weight	660 g		

Temperatures

Limit temperature	-50 °C ... 125 °C

Environmental Product Compliance

RoHS Compliance Status	Compliant without exemption	
REACH SVHC	No SVHC above 0.1 wt%	
Chemical resistance	Substance	Acetone
	Chemical resistance	Resistant
	Substance	Diesel oil
	Chemical resistance	Unstable
	Substance	Ethyl alcohol
	Chemical resistance	Resistant
	Substance	Transmission oil
	Chemical resistance	Conditionally resistant
	Substance	Hydraulic oil
	Chemical resistance	Conditionally resistant
	Substance	Petroleum benzine
	Chemical resistance	Unstable
	Substance	Sweat
	Chemical resistance	Conditionally resistant
	Substance	Premium gasoline
	Chemical resistance	Unstable
	Substance	Water
	Chemical resistance	Resistant
	Substance	UV
	Chemical resistance	Resistant
	Substance	Ozone
	Chemical resistance	Resistant

Dimensions

Cable entry	w. thread	Total length housing	191 mm
Height of housing B	110.5 mm		

General data

Tightening torque	6.5 Nm	Housing main material	diecast aluminium
Surface finish	Powder coating	Protection degree	IP66, IP68, IP69, in plugged condition
EMC housings	Yes	Material of locking element	Stainless steel, rust-proof

HDC IP68 24B TSS 1M32

Weidmüller Interface GmbH & Co. KG
Klingenbergstraße 26
D-32758 Detmold
Germany

www.weidmueller.com

Technical data

Version

Number of cable glands	0	Size of cable entries	M 32
Top part/bottom part/lid	upper part	Cover	without cover
Tightening torque	6.5 Nm	Number of cable entry on top	0
Number of cable entry sideways	1	Design of housing	Plug housing
Design of locking system	Clamping yoke connection	Design	Standard
Installation size	8	Cable entry	w. thread
Type	Plug	Clamp version	Clamping yoke connection
Sealing	no sealing	Internal thread	M 32
Colour (RAL)	RAL 9011, RAL 9005	BG	8
Suitable for ModuPlug®	Yes		

Classifications

ETIM 8.0	EC000437	ETIM 9.0	EC000437
ETIM 10.0	EC000437	ECLASS 14.0	27-44-02-02
ECLASS 15.0	27-44-02-02		

HDC IP68 24B TSS 1M32

Weidmüller Interface GmbH & Co. KG
Klingenbergstraße 26
D-32758 Detmold
Germany

www.weidmueller.com

Drawings

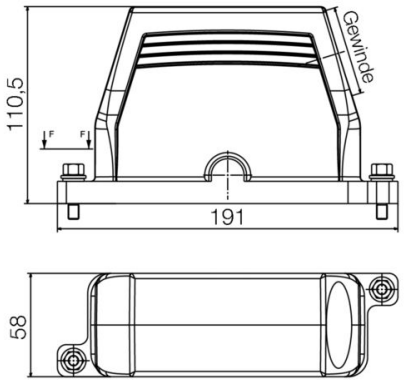

HDC IP68 24B TSS 1M32

Weidmüller Interface GmbH & Co. KG
Klingenbergstraße 26
D-32758 Detmold
Germany

www.weidmueller.com

Accessories

Socket wrench sets

Allen key made from fully hardened, high-alloy chromium-vanadium- steel, acc. to DIN ISO 2936 L (DIN 911), high-quality refined surface.

General ordering data

Type	SK WSD-S 1,5-10,0	Version
Order No.	9008850000	Mounting tool
GTIN (EAN)	4032248266609	
Qty.	1 ST	

Screws

We offer a variety of accessories, including screws, that fit to the heavy-duty connectors.

General ordering data

Type	HDC IP68 SCREW SET	Version
Order No.	2555340000	Heavy-duty connectors, Accessories, Set of fixings
GTIN (EAN)	4050118571332	
Qty.	10 ST	